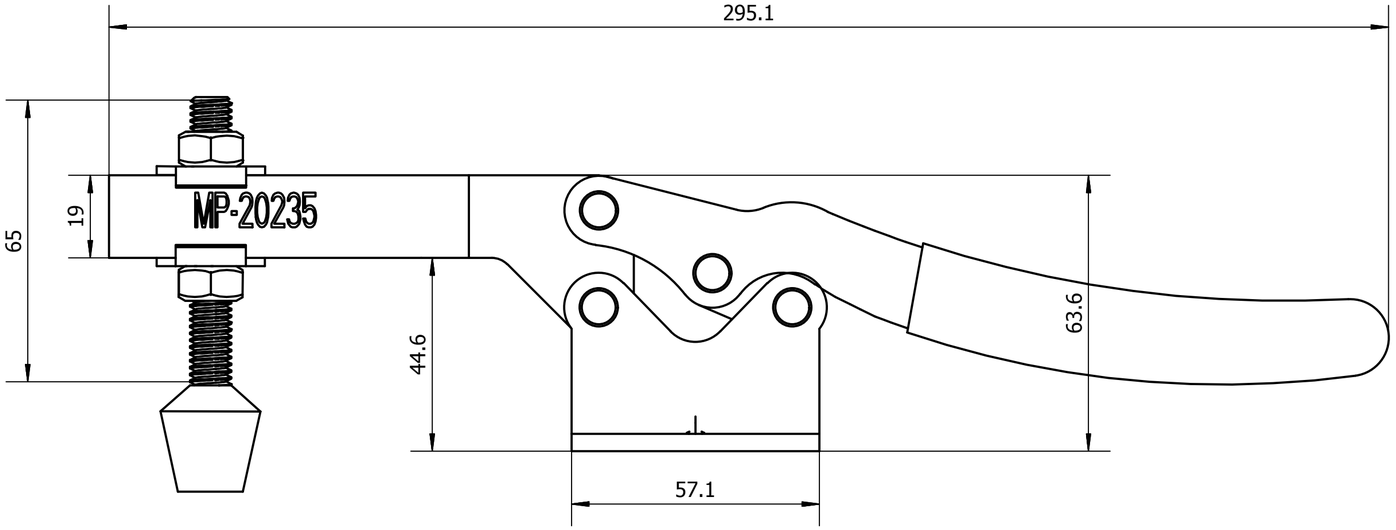
295.1
65
19
MP-20235
44.6
63.6
57.1

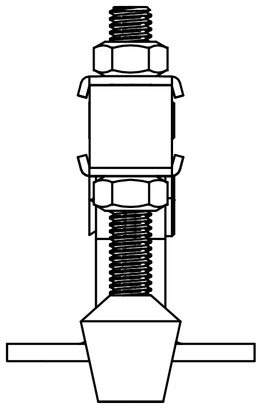

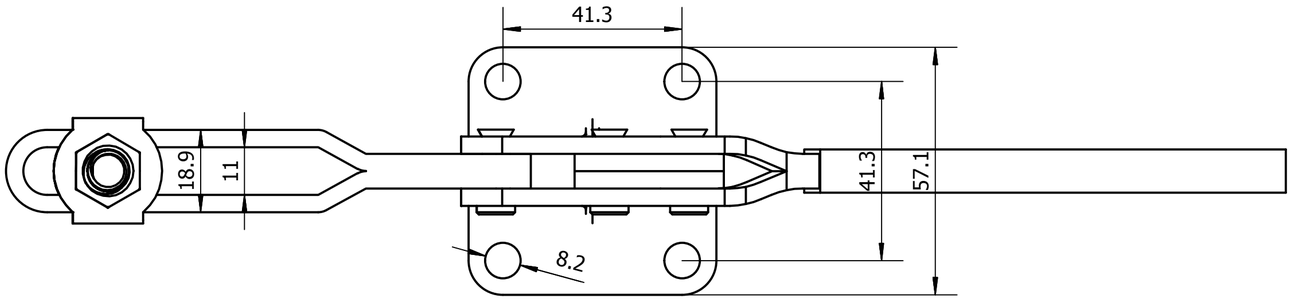
41.3
18.9
11
41.3
57.1
8.2

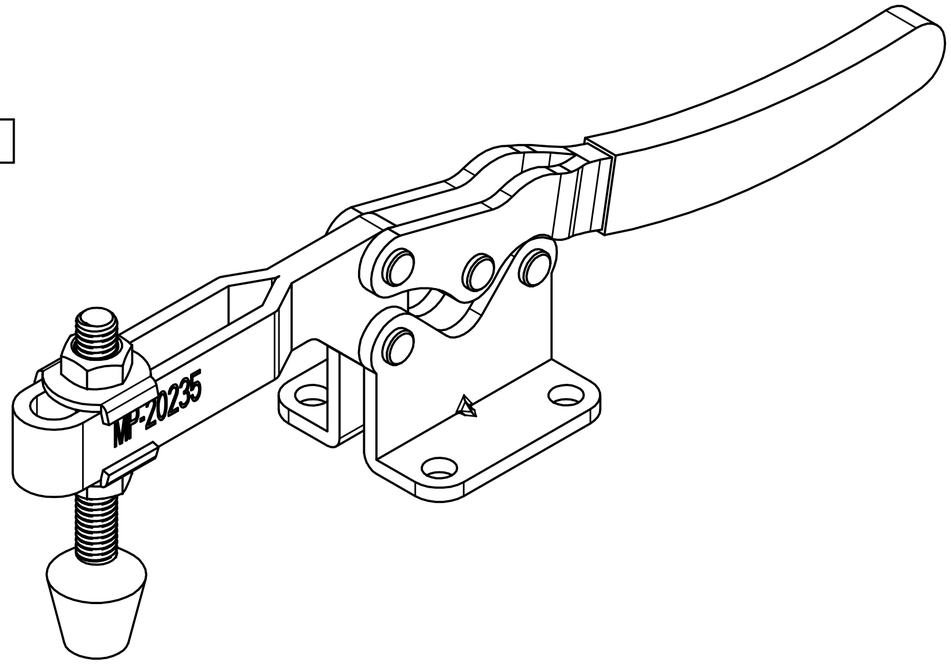
MP-20235