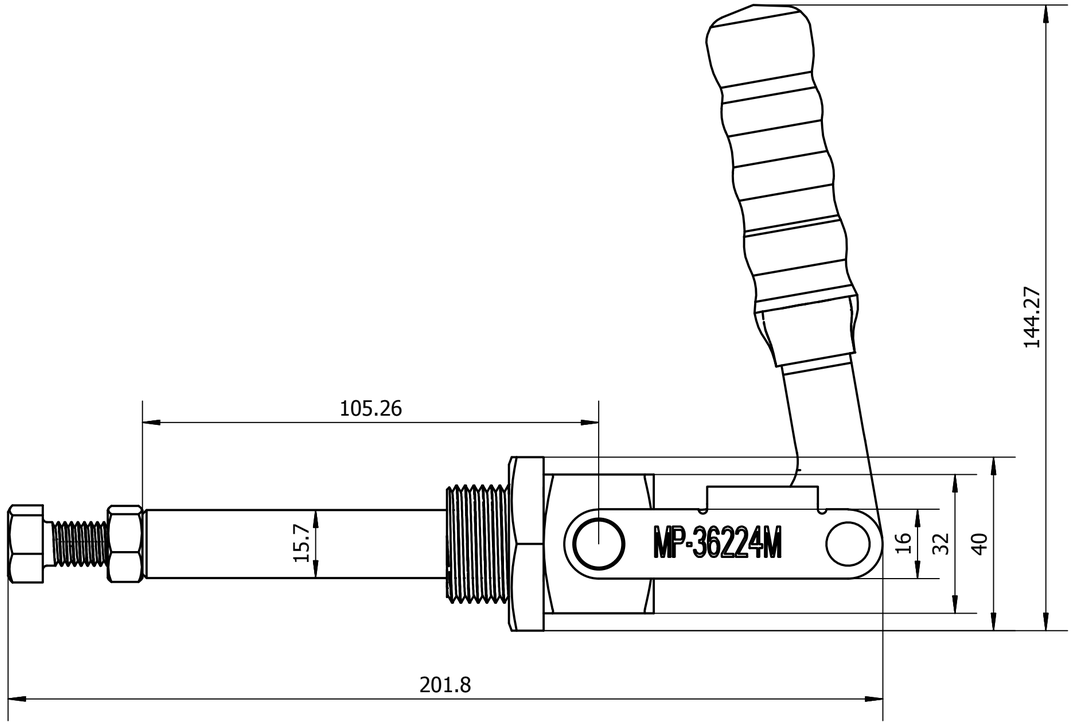
105.26
144.27
15.7
MP-36224M
16
32
40
201.8

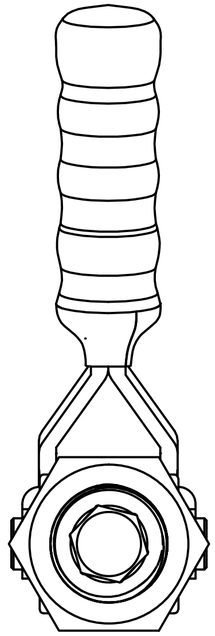

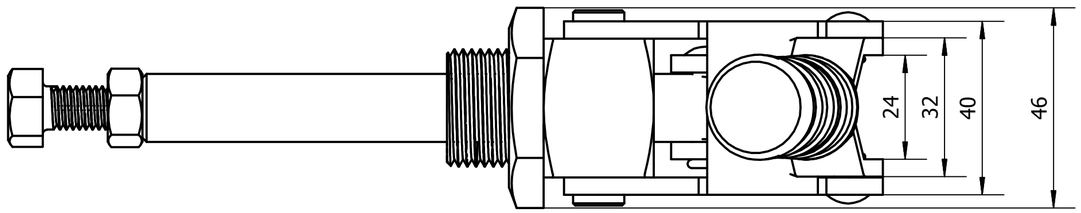
24
32
40
46

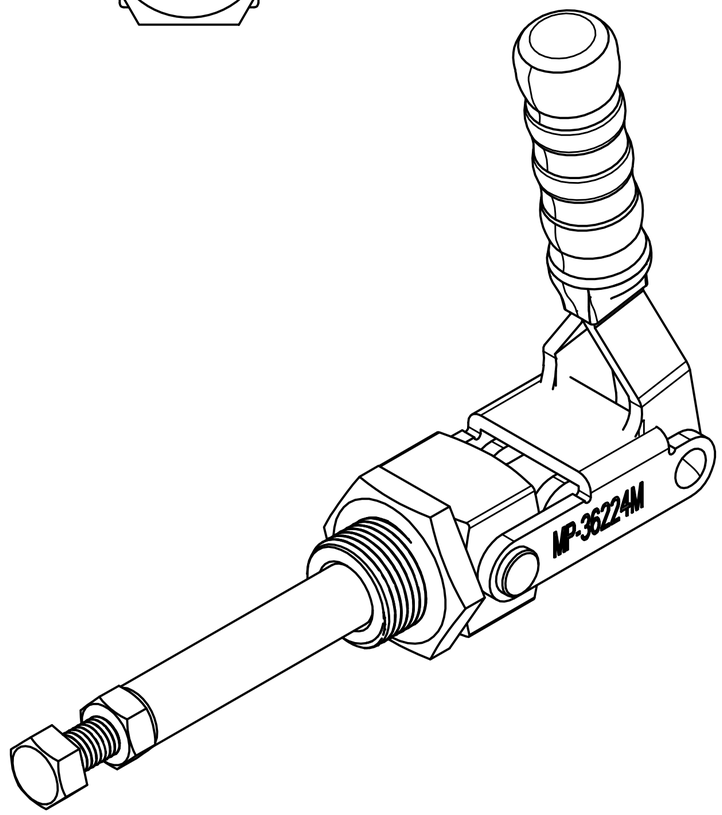
MP-36224M