HAFCO METALMASTER

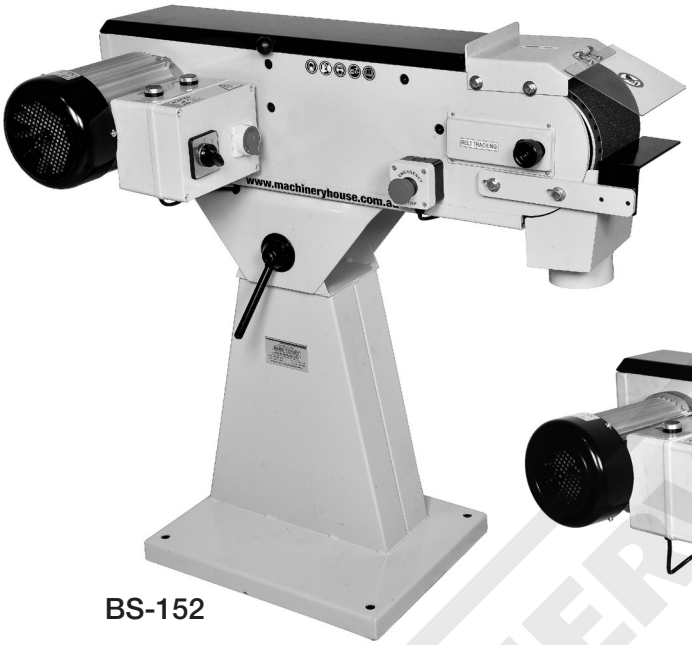

BS-152

BS-76

Edition : 2.0
Date: (05/25)

Instruction Manual

BELT LINISHER SANDERS
BS-76 & BS-152

Order Code: (L119 & L120)

MACHINE DETAILS

MACHINE.	BELT LINISHER SANDER
MODEL NO.	BS-76 & BS-152
SERIAL NO.	
DATE OF MANF.	

Imported by

AUSTRALIA

HARE&FORBES MACHINERYHOUSE

www.machineryhouse.com.au

NEW ZEALAND

MACHINERYHOUSE

www.machineryhouse.co.nz

MACHINERYHOUSE

NOTE:
This manual is only for your reference. At the time of the compiling of this manual every effort to be exact with the instructions, specifications, drawings, and photographs of the machine was taken. Owing to the continuous improvement of the HAFCO METALMASTER machine, changes may be made at any time without obligation or notice. Please ensure the local voltage is the same as listed on the specification plate before operating any electric machine.

SAFETY SYMBOLS:
The purpose of safety symbols is to attract your attention to possible hazardous conditions.

⚠ WARNING ***Indicates a potentially hazardous situation causing injury or death.***

⚠ CAUTION ***Indicates an alert against unsafe practices.***

Note: Used to alert the user to useful information.

NOTE:
In order to see the type and model of the machine, please see the specification plate. Usually found on the back of the machine. See example (Fig.1)

HAFCO METALMASTER

PRODUCT SPECIFICATIONS

Model: BS-76

Belt Size: 75 x 2000mm — Voltage: 415V/50Hz

Nett Weight: 70kg — Motor: 2.2kW/3hp

MFG Date: — FLC: 3.88/2.99A

Serial No:

Imported by — Made in China

www.machineryhouse.com.au — **www.machineryhouse.co.nz**

FIG.1

CONTENTS

1. GENERAL MACHINE INFORMATION
1.1 Specifications..... 4
1.2 Accessories Included..... 4
1.3 Identification..... 5

2. SAFETY
2.1 General Metalworking Machine Safety..... 6
2.2 Specific Safety Linisher Sander..... 9

3. POWER SUPPLY
3.1 Electrical Requirements..... 10
3.2 Full Load Current..... 10

4. SETUP
4.1 Unpacking..... 11
4.2 Clean Up..... 11
4.3 Site Preparation..... 11
4.4 Lifting Instructions..... 11
4.5 Anchoring To The Floor..... 12
4.6 Machine Leveling..... 12
4.7 Assembly..... 13
4.8 Test Run..... 14

5. OPERATION
5.1 Controls..... 15
5.2 Angle Adjustment..... 16
5.3 Grinding Tips..... 16
5.4 Work Rest..... 16
5.5 Changing the Belt..... 17
5.6 Belt Tracking..... 17

6. MAINTENANCE
6.1 Schedule..... 18
6.2 Optional Accessories..... 18
6.3 Troubleshooting..... 19

SPARE PARTS..... 20
Wiring Diagram..... 21
BS-76 Parts Diagram and List..... 22
BS-152 Parts Diagram and List..... 24

Risk Assessment Sheets..... 26

MACHINERY HOUSE

1.1 SPECIFICATION

Order Code	L119	L120
MODEL	**BS-76**	**BS-152**
Type	Linisher Sander	Linisher Sander
Mounting Type - Bench / Pedestal	Pedestal	Pedestal
Includes Stand	Yes	Yes
Belt Speed (fpm / mpm)	2850, 5700 / 870, 1740	2850, 5700 / 870, 1740
Belt Size (mm)	75 x 2000	150 x 2000
Motor Speed (rpm)	1420 / 2840	1420 / 2840
Motor Power (kW/hp)	2.2 / 3	2.8 / 3.7
Voltage (V)	415	415
Dimensions (L x W x H)	70 x 48 x 113	70 x 53 x 113
Shipping Dimensions (L x W x H) (cm)	71 x 49 x 116	71 x 54 x 116
Nett Weight (kg)	93	99

MACHINERY HOUSE

1.2 ACCESSORIES INCLUDED

Stand
Front and Rear Chute
Belt

1.3 IDENTIFICATION

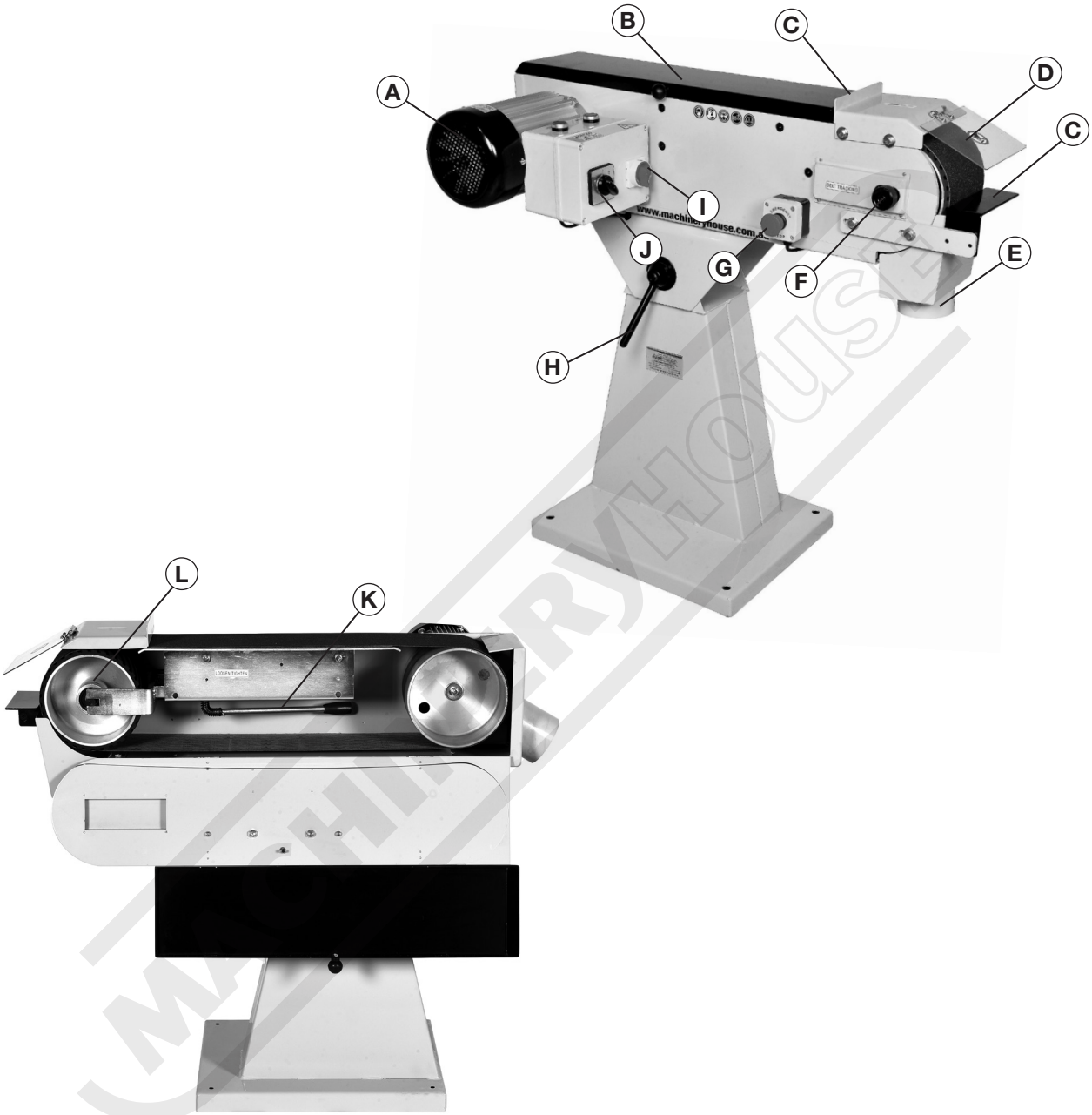

A	Motor	**G**	Emergency Stop Button
B	Belt Guard	**H**	Tilting Lever
C	Work / Tool Rests	**I**	Isolating Switch
D	Eye Shield	**J**	Two Speed Motor Switch
E	Spark Arrester.	**K**	Belt Release Lever
F	Belt Tracking Knob	**L**	Contact Wheel

2.1 GENERAL METALWORKING MACHINE SAFETY

DO NOT use this machine unless you have read this manual or have been instructed in the use of this machine in its safe use and operation

WARNING

This manual provides safety instructions on the proper setup, operation, maintenance, and service of this machine. Save this manual, refer to it often, and use it to instruct other operators. Failure to read, understand and follow the instructions in this manual may result in fire or serious personal injury—including amputation, electrocution, or death.

The owner of this machine is solely responsible for its safe use. This responsibility includes, but is not limited to proper installation in a safe environment, personnel training and authorization to use, proper inspection and maintenance, manual availability and comprehension of the application of the safety devices, integrity, and the use of personal protective equipment.

The manufacturer will not be held liable for injury or property damage from negligence, improper training, machine modifications or misuse.

- ✓ Always wear safety glasses or goggles.
- ✓ Wear appropriate safety footwear.
- ✓ Wear respiratory protection where required.
- ✓ Gloves should never be worn while operating the machine, and only worn when handling the work piece.
- ✓ Wear hearing protection in areas > 85 dBA. If you have trouble hearing someone speak from one metre (three feet) away, the noise level from the machine may be hazardous.
- ✓ DISCONNECT THE MACHINE FROM POWER when making adjustments or servicing.
- ✓ Check and adjust all safety devices before each job.
- ✓ Ensure that guards are in position and in good working condition before operating.
- ✓ Ensure that all stationary equipment is anchored securely to the floor.
- ✓ Ensure all machines have a start/stop button within easy reach of the operator.
- ✓ Each machine should have only one operator at a time. However, everyone should know how to stop the machine in an emergency.

MACHINERY HOUSE

2.1 GENERAL METALWORKING MACHINE SAFETY Cont.

- ✓ Ensure that keys and adjusting wrenches have been removed from the machine before turning on the power. Appropriate storage for tooling should be provided.
- ✓ Ensure that all cutting tools and blades are clean and sharp. They should be able to cut freely without being forced.
- ✓ Stop the machine before measuring, cleaning or making any adjustments.
- ✓ Wait until the machine has stopped running to clear cuttings with a vacuum, brush or rake.
- ✓ Keep hands away from the cutting head and all moving parts.
- ✓ Avoid awkward operations and hand positions. A sudden slip could cause the hand to move into the cutting tool or blade.
- ✓ Return all portable tooling to their proper storage place after use.
- ✓ Clean all tools after use.
- ✓ Keep work area clean. Floors should be level and have a non-slip surface.
- ✓ Use good lighting so that the work piece, cutting blades, and machine controls can be seen clearly. Position any shade lighting sources so that they do not cause any glare or reflections.
- ✓ Ensure there is enough room around the machine to do the job safely.
- ✓ Obtain first aid immediately for all injuries.
- ✓ Understand that the health and fire hazards can vary from material to material. Make sure all appropriate precautions are taken.
- ✓ Clean machines and the surrounding area when the operation is finished.
- ✓ Use proper lock out procedures when servicing or cleaning the machines or power tools.

DO NOT

- x Do not distract an operator. Horseplay can lead to injuries and should be strictly prohibited.
- x Do not wear loose clothing, gloves, neckties, rings, bracelets or other jewellery that can become entangled in moving parts. Confine long hair.
- x Do not handle cuttings by hand because they are very sharp. Do not free a stalled cutter without turning the power off first. Do not clean hands with cutting fluids.
- x Do not use rags or wear gloves near moving parts of machines.
- x Do not use compressed air to blow debris from machines or to clean dirt from clothes.
- x Do not force the machine. It will do the job safer and better at the rate for which it was designed.

CAUTION !

A prepared list of safety guidelines can never be complete. Every workshop environment is different. Always consider Safety first, as it applies to your individual working conditions. Use this machine and other machinery with caution and respect. Failure to do so could result in serious Personal injury, damage to the equipment, or poor work results.

MACHINERY HOUSE

2.1 GENERAL METALWORKING MACHINE SAFETY Cont.

HAZARDS ASSOCIATED WITH MACHINES include, but are not limited to:

- Being struck by ejected parts of the machinery
- Being struck by material ejected from the machinery
- Contact or entanglement with the machinery
- Contact or entanglement with any material in motion

Health Hazards (other than physical injury caused by moving parts)

- Chemicals hazards that can irritate, burn, or pass through the skin
- Airborne items that can be inhaled, such as oil mist, metal fumes, solvents, and dust
- Heat, noise, and vibration
- Ionizing or non-ionizing radiation (X-ray, lasers, etc.)
- Biological contamination and waste
- Soft tissue injuries (for example, to the hands, arms, shoulders, back, or neck) resulting from repetitive motion, awkward posture, extended lifting, and pressure grip.

Other Hazards

- Slips and falls from and around machinery during maintenance
- Unstable equipment that is not secured against falling over
- Safe access to/from machines (access, egress)
- Fire or explosion
- Pressure injection injuries from the release of fluids and gases under high pressure
- Electrical Hazards, such as electrocution from faulty or ungrounded electrical components
- Environment in which the machine is used (in a machine shop, or on a work site)

MACHINERY HOUSE

WARNING

The machine is the sole responsibility of the owner for its safe use. This responsibility includes but is not limited to proper installation in a safe environment, personnel training, proper inspection and maintenance, manual availability and comprehension. The manufacturer will not be held liable for injury or property damage from negligence, improper training, machine modifications or misuse.

CAUTION!

It is impossible to cover all possible hazards. All workshop environments are different. These are designed as a guide to be used to compliment training and as a reminder to users prior to equipment use. Always consider safety first, as it applies to the individual working conditions.

2.2 SPECIFIC SAFETY FOR LINISHER SANDER

DO NOT use this machine unless you have been instructed in its safe use and operation and have read and understood this manual

Safety glasses must be worn at all times in work areas

Long and loose hair must be contained or restrained

Sturdy footwear must be worn at all times in work areas

Close fitting/protective clothing must be worn

Rings and jewelery must not be worn.

A mask must be worn when excessive airborne dust is created

PRE-OPERATIONAL SAFETY CHECKS

- ☑ Check the workroom and walkways to ensure there are no slip/trip hazards present.
- ☑ Ensure you are familiar with the operation of the ON/OFF switch and emergency stop.
- ☑ Check the linishing belt is in a serviceable condition with no edge fraying, tears or holes
- ☑ Ensure the operator is positioned out of the direct line of the abrasive belt at all times.
- ☑ Ensure the metal dust extraction is on before operating sanding machine.
- ☑ Faulty equipment must not be used. Immediately report suspect machinery.
- ☑ Ensure material is well supported – use roller/support stands for longer lengths.

OPERATIONAL SAFETY CHECKS

- ☑ Allow the machine to reach maximum revolutions before operating to avoid overloading.
- ☑ Hold material firmly against stops or table before applying pressure on abrasive belt.
- ☑ Keep fingers clear of the linishing belt while sanding.
- ☑ NEVER attempt to sand small items or try to sharpen small metal tools without a jig
- ☑ Never leave the machine while it is running.
- ☑ Before making adjustments switch off and bring the machine to a complete standstill.

DON'T

- ☒ DO NOT operate equipment without wearing appropriate PPE
- ☒ DO NOT use the wrong type of belt or disc for the operation.
- ☒ DO NOT attempt to sand very small items or use heavy pressure
- ☒ NEVER leave the machine running unattended.
- ☒ DO NOT Use faulty equipment. Immediately report any suspect equipment and apply a "**DO NOT USE**" tag

POTENTIAL HAZARDS

- ❑ Exposure to moving, abrasive and rotating parts
- ❑ Eye injuries
- ❑ Burns to skin
- ❑ Pinch and squash
- ❑ Ejected waste
- ❑ Excessive dusts

MACHINERY HOUSE

3. POWER SUPPLY

3.1 ELECTRICAL REQUIREMENTS

Place the machine near an existing power source. Make sure all power cords are protected from traffic, material handling, moisture, chemicals, or other hazards. Make sure there is access to a means of disconnecting the power source. The electrical circuit must meet the requirements for 415V. To minimize the risk of electrocution, fire, or equipment damage, these machines should be hard wired with installation work and electrical wiring done by a qualified electrician.

NOTE : The use of an extension cord is not recommended as it may decrease the life of electrical components on your machine.

ELECTRICAL REQUIREMENTS

Nominal Voltage..... 415V
Cycle..... 50 Hz
Phase..... Three Phase
Power Supply Circuit..... 15 Amps
Full Load Current..... 4.7 Amps

(Full load current rating is also on the specification plate on the motor.)

3.2 FULL-LOAD CURRENT RATING

The full-load current rating is the amperage a machine draws when running at 100% of the output power. Where machines have more than one motor, the full load current is the amperage drawn by the largest motor or a total of all the motors and electrical devices that might operate at one time during normal operations.

Full-Load Current Rating for these machine at 415V is 4.7 Amps

It should be noted that the full-load current is not the maximum amount of amps that the machine will draw. If the machine is overloaded, it will draw additional amps beyond the full-load rating and if the machine is overloaded for a long period of time, damage, overheating, or fire may be caused to the motor and circuitry.

This is especially true if connected to an undersized circuit or a long extension lead. To reduce the risk of these hazards, avoid overloading the machine during operation and make sure it is connected to a power supply circuit that meets the requirements.

MACHINERY HOUSE

4 SETUP

4.1 UNPACKING

This machine was carefully packaged for safe transport. When unpacking, separate all enclosed items from packaging materials and inspect them for shipping damage. If items are damaged, please contact your distributor.

NOTE: Save all the packaging materials until you are completely satisfied with the machine and have resolved any issues with the distributor, or the shipping agent.

When unpacking, check the packing list to make sure that all parts shown are included. If any parts are missing or broken, please contact your distributor.

4.2 CLEAN - UP

The unpainted surfaces of the machine have been coated with a waxy oil to protect them from corrosion during shipment. Remove the protective coating with a solvent cleaner or a citrus based degreaser.

Optimum performance from your machine will be achieved when you clean all moving parts or sliding contact surfaces that are coated with rust prevented products.

It is advised to avoid chlorine based solvents, such as acetone or brake parts cleaner, as they will damage painted surfaces and strip metal should they come in contact. Always follow the manufacturer's instructions when using any type of cleaning product.

4.3 SITE PREPARATION

When selecting the site for the machine, consider the largest size of workpiece that will be processed through the machine and provide enough space around the machine for operating the machine safely. Consideration should be given to the installation of auxiliary equipment. Leave enough space around the machine to open or remove doors/covers as required for the maintenance and service as described in this manual.

It is recommended that the machine is anchored to the floor to prevent tipping or shifting. It also reduces vibration that may occur during operation.

4.4 LIFTING INSTRUCTIONS

⚠ WARNING ***This machine is extremely heavy. Serious personal injury may occur if safe moving methods are not followed. To be safe, you will need assistance and power equipment when moving the shipping crate and removing the machine from the crate.***

On the day that the machine arrives, make sure that a forklift or lifting device, with sufficient capacity is available to unload the machine from the vehicle. Ensure access to the chosen site is clear and that doors and ceilings are sufficiently high and wide enough to receive the machine.

MACHINERY HOUSE

4.5 ANCHORING TO THE FLOOR

The machine is best mounted on a concrete slab. Masonry anchors with bolts are the best way to anchor machinery, because the anchors sit flush with the floor surface, making it easy to unbolt and move the machine later, if needed. (Fig. 4.1)

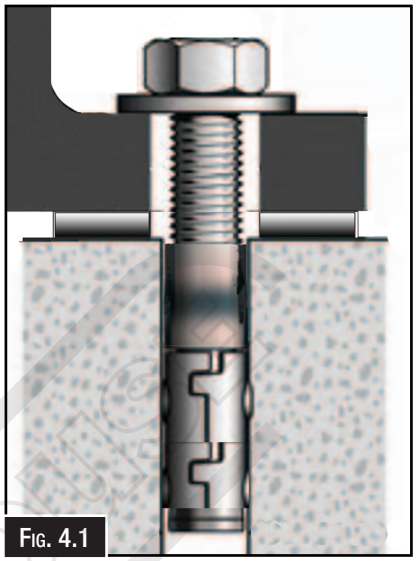

Fig. 4.1

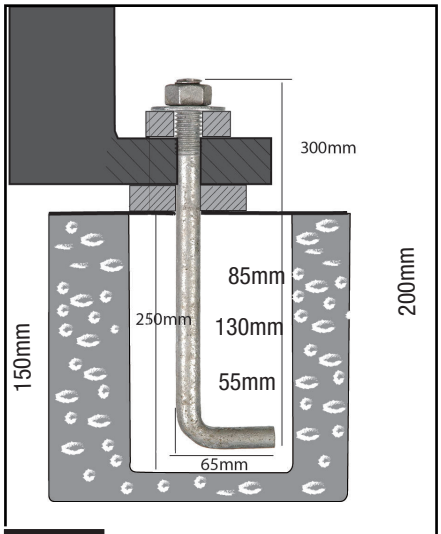

Fig. 4.2

In some case a suitable foundation may not be available and a new one may need to be prepared.

The foundation should be concrete approximately 150mm thick with pockets left clear for the hold down bolts. The hold down bolts can be “L” shape as per the example in Fig. 4.2

4.6 MACHINE LEVELING

To set your machine up so that it operates to optimum performance, apply the following procedure-

After your machine has been anchored to a concrete slab floor, it then needs to be leveled. Loosen the hold down bolts and place a level on the surface of the working table. Metal shims need to be placed under corner of the base of the machine until level. Once level then tighten the hold down bolts. (Fig. 4.3).

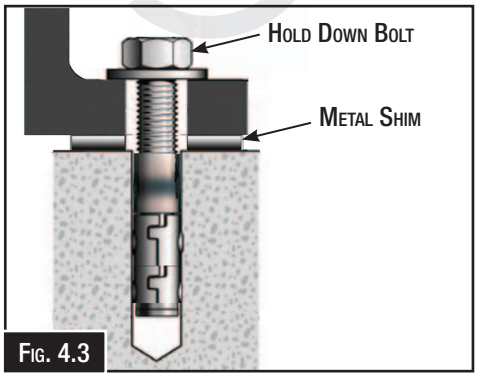

Fig. 4.3

CAUTION

The machine must not rest on supports other than those defined in Fig. 4.3.

MACHINERY HOUSE

4.7 ASSEMBLY

The machine must be fully assembled before it can be operated. First clean any parts that are coated in rust preventative to ensure the assembly process can proceed smoothly.

Mounting The Linisher Sander
This mounting of the Linisher will require suitable lifting equipment to complete this step. While holding the sander in place, then the bolt and sleeve can be installed.

To Mount the Linisher to the Base:

1. Set the base on the floor where the machine is going to be placed with the stand in the upright position.

2. Slide the sleeve through the holes so it spans the width of the base yoke.

3. With the appropriate lifting equipment, lift the sander, spread the yoke on the sander slightly and set onto the base. (Fig. 4.4)

.

4. Slide the hex bolt and fender washers through the sleeve and then screw the angle adjustment lever on to the bolt and tighten the Linisher head in position.

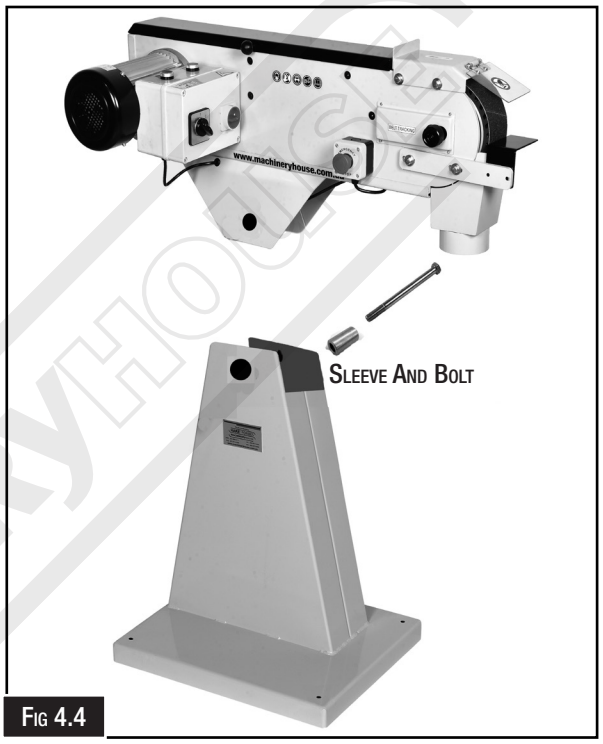

Fig 4.4

EYE SHIELD, SPARK TRAP AND WORK REST
All of these accessories must be assembled before operating the machine. (Fig. 4.5)

DUST COLLECTION
These machines come with a 100mm dust collection port to attach a metal dust collector.

⚠ CAUTION ***DO NOT operate the machine with a dust collection system that has been previously used for wood dust collection or other combustible material. Hot metal sparks and fragments could cause materials to ignite! Only a dust collection system rated specifically for metal should be used.***

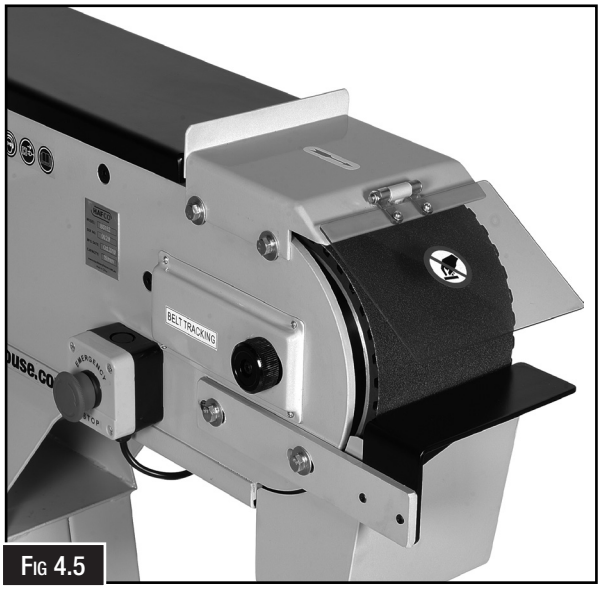

Fig 4.5

4.8 TEST RUN

Once assembly is complete, test run the machine to ensure it is properly connected to the power and safety components are functioning correctly. Check that the direction of the motor is correct, and make sure that the belt travels in the correct direction.

If the direction is incorrect, isolate the machine and have the electrician make changes to the wiring.

If you find an unusual problem during the test run, immediately stop the machine, disconnect it from power, and fix the problem BEFORE operating the machine again. The Troubleshooting table in the Maintenance section of this manual may be able to help. If the problem persists then contact your dealers service technician.

To test run the machine:

1. Connect the machine to the power supply.
2. Make sure that the manual has been read and that the safety instructions at the beginning of the manual are understood. Make sure the machine has been setup correctly
3. Make sure all tools and objects used during set up have been cleared away from the machine.
4. Turn the machine ON.
5 Make sure that the belt is traveling in the correct direction.
6. Listen to and watch for abnormal noises or actions. The machine should run smoothly with little or no vibration or rubbing noises.
7. Any strange or unusual noises should be investigated and corrected before operating the machine again. Always disconnect the machine from power supply when investigating or correcting potential problems. Check the troubleshooting table on Page 18 in the maintenance section for possible solutions to the problem. If no solution can be found then contact your local dealer's service engineer.

Testing The Emergency Stop Button

Make sure that the emergency button has been reset. Start the machine and then press the emergency stop button.

The machine should stop and the power should be cut off. If the machine cannot be started then the emergency stop is working correctly.

To reset the emergency stop twist the red top until it pops up.

MACHINERY HOUSE

5. OPERATION

This machine may perform many types of operations that are beyond the scope of this manual. Many of these operations may be dangerous or deadly if performed incorrectly.

The instructions in this section are written with the understanding that the operator has the necessary knowledge and skills to operate this machine. If at any time you are experiencing difficulties performing any operation, stop using the machine!

If you are an inexperienced operator, we strongly recommend that you read books, trade articles, or seek training from an experienced operator before performing any unfamiliar operations.

Above all, your safety should come first!

5.1 CONTROLS

The purpose of this control overview is to provide the novice machine operator with a basic understanding of how the machine is used during operation, and the machine controls and what they do. It also helps the operator to understand if they are discussed later in this manual.

NOTE: DO NOT start the machine until all of the setup instructions have been performed. Operating a machine that is not setup may result in malfunction or unexpected results that can lead to serious injury, death or damage to the machine or property.

A **Isolating Switch:** Disconnects the power to the machine. (Fig. 5.1)

NOTE: When servicing the machine remove the plug from the wall socket or if hard wired, remove the fuses on the main distribution board.

B **ON Button:** Starts the motor of the machine.

C **OFF Button:** Stops the motor of the machine.

D **Speed Switch:** Selects the speed of the motor
- **1.** Slow Speed
- **0.** No Speed
- **2.** High Speed (Fig.5.1)

E **Emergency Stop Button:** Stops the motor and prevents it from starting until the button has been reset. (Fig. 5.2)

NOTE: To reset the emergency stop button see the instructions under Testing The Emergency Stop Button on Page 14.

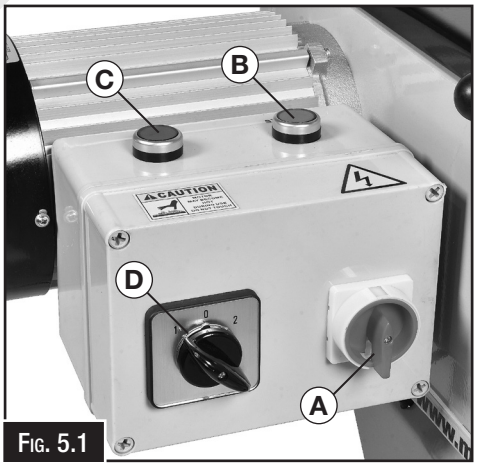

Fig. 5.1

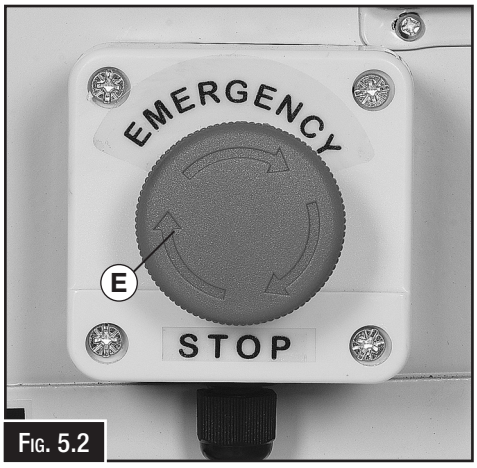

Fig. 5.2

MACHINERY HOUSE

5.2 ANGLE ADJUSTMENT

The Linisher can be tilted up and down to meet different operations. (Fig. 5.3)

Before adjusting DISCONNECT THE LINISHER FROM THE POWER SUPPLY!

Use the angle adjustment clamp lever shown in Fig. 5.4 to lock the Linisher at the angle that is required.

Tighten securely, so that the linisher will not move during operation.

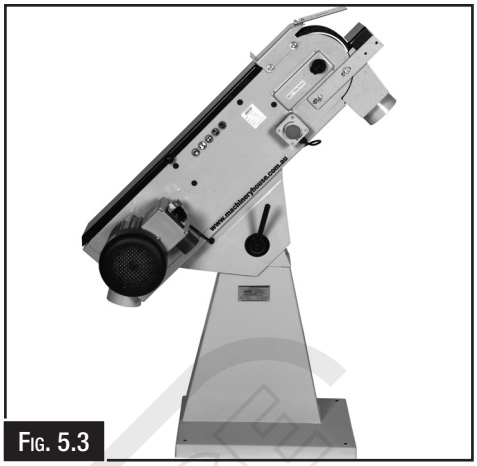

Fig. 5.3

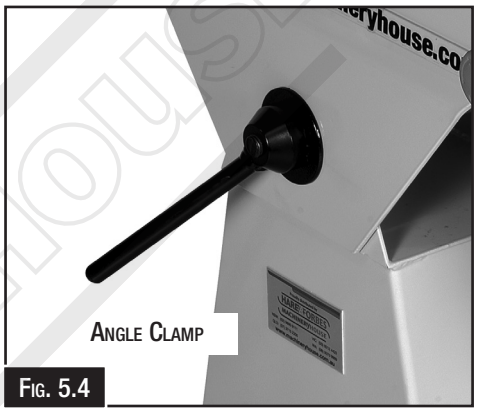

Fig. 5.4

5.3 GRINDING TIPS

1. Allow the machine to reach its maximum revolutions linisher to avoid overloading.
2. Hold the material firmly against stops or on the table abrasive belt.
3. Keep fingers and hands clear of the linishing belt while sanding.
4. NEVER attempt to sand small items or try to sharpen small metal items without a jig.
5. The workpiece will get hot as you continue to grind. Cool the workpiece frequently by quenching in water or another approved solution.
6. Do not force the work into the sander.

5.4 WORK REST

The Linisher comes with an adjustable work rest that sits just above the spark trap. The work rest must be adjusted so as to sit as close as possible to the belt.

This will prevent the workpiece from being dragged down between the belt and the rest. (Fig 5.5)

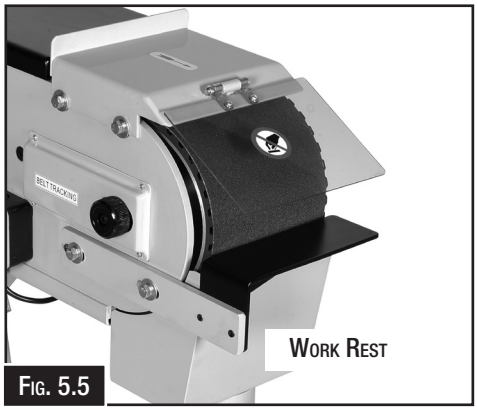

Fig. 5.5

WARNING.

When operating a Linisher it is important to wear appropriate safety gear to protect yourself from injury. This includes safety glasses or goggles, or a face shield to protect your eyes from flying debris.

5.5 CHANGING THE BELT

Belts with different grit sizes will need to be changed. Changing the belts on these machines is very easy.

1. DISCONNECT THE LINISHER FROM THE POWER SUPPLY!
2. Ensure that the belt has come to a complete stand still. Then open the belt guard, and the side cover.
3. Loosen the belt by moving the belt tension lever all the way to the left. (Fig.5.6)
4. Slip the belt off of the wheels and replace with a new belt. Note the correct rotational direction of the belt.
5. Tighten the belt by pulling the belt tension all the way from the left to the right.
6. Spin the belt by hand to check the belt tracking. Adjust if necessary. (See “Belt Tracking” Below)
7. Close and latch the side cover, and close the belt guard.

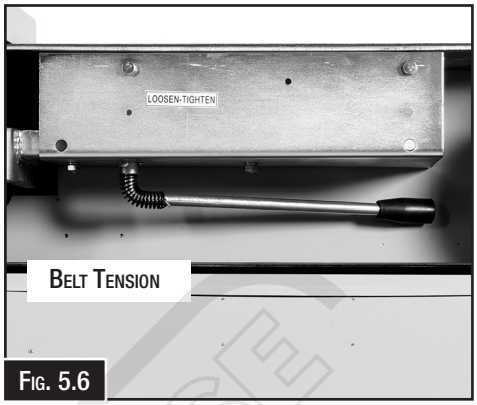

Belt Tension
Fig. 5.6

WARNING

SAFETY FIRST

The safety instructions given in this manual cannot be complete. The environment in every shop is different. Always consider your safety first as it applies to your individual working conditions.

WARNING.

Abrasive belts are dangerous and can cause serious injury if fingers or clothing are caught in the belt. Take care to ensure that safety is followed at all times when operating the machine.

5.6 BELT TRACKING

When first starting the linisher, the belt may not track centrally on the contact wheel and the belt tracking may need to be adjusted.

To adjust the belt tracking:

1. Turn the sander ON.
2. Making small adjustments, turn the belt tracking adjustment knob clockwise to move the belt to the left, or turn the knob counterclockwise to move the belt to the right (Fig. 5.7)
3. Make sure the belt is not making contact with the edge of the body of the linisher and that it is centered on the contact wheel.

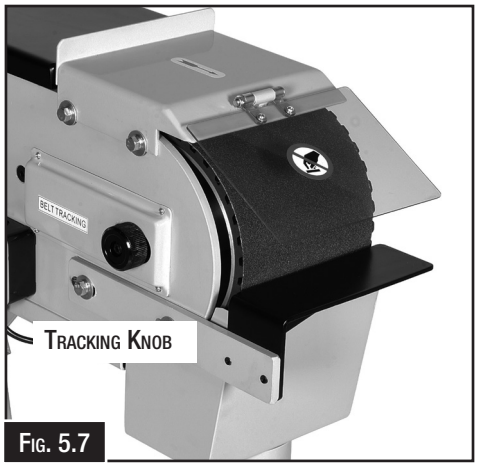

Tracking Knob
Fig. 5.7

MACHINERY HOUSE

6. MAINTENANCE

⚠WARNING ***Before maintaining or cleaning the machine, turn off the circuit breaker, or disconnect the machine from the power supply. Post a sign to inform other workers that the machine is under maintenance.***

For optimum performance from the machine, it is important that the machine is well cleaned and maintain. Follow the maintenance schedule listed in the following section and refer to any specific instructions given.

6.1 SCHEDULE

Daily Check
- Loose mounting bolts.
- Worn or damaged wires.
- Check/adjust lubrication.
- Any other unsafe condition
- Inspect the belt for damage or excessive use.

Cleaning
Cleaning the machine is relatively easy. Wipe down all unpainted and machined surfaces daily to keep them rust free and in top condition. This includes any surface that is vulnerable to rust if left unprotected. Use ISO 68 machine oil or any other quality metal lubricant.

Normal maintenance of the contact wheel and the steering roller is needed.

The outside cover of the belt, and the grinding remnants and dust in the outlet ports should be frequently cleaned and kept clean to resist build up.

6.2 OPTIONAL ACCESSORIES

Replacement Belts for BS-76
40G Zirconia Linishing Belt Pack
(Order Code A8079)

60G Zirconia Linishing Belt Pack
(Order Code A8080)

80G Zirconia Linishing Belt Pack
(Order Code A8081)

100G Zirconia Linishing Belt Pack
(Order Code A8082)

120G Zirconia Linishing Belt Pack
(Order Code A8083)

Replacement Belts for BS-152
40G Zirconia Linishing Belt Pack
(Order Code A8090)

60G Zirconia Linishing Belt Pack
(Order Code A8091)

80G Zirconia Linishing Belt Pack
(Order Code A8092)

100G Zirconia Linishing Belt Pack
(Order Code A8093)

MACHINERYHOUSE

6.3 TROUBLESHOOTING

Review the troubleshooting and procedures in this section if a problem develops with your machine. If you need replacement parts then follow the procedure in the beginning of the spare parts section or if additional help with a procedure is required, then contact your distributor.

Note: Make sure you have the model of the machine, serial number,and manufacture date before calling.

Symptoms	Possible Cause	Possible Solution
The machine will not start	1. Unplugged from power supply 2. Protector is tripped 3. Power cord is damaged	1. Check all plug connections 2. Replace fuse or reset circuit breaker 3. Replace cord
Belt does not come up to speed	1. Extension cord too light or too long 2. Motor is not wired for proper voltage 3. Low current	1. Replace with adequate size and proper length cord 2. Refer to motor junction box for proper wiring 3. Contact a qualified electrician
Machine vibrates excessively	1. Stand on uneven floor 2. Motor mounts are loose 3. Tension spring is worn or broken	1. Adjust base so that it rests evenly on the floor 2. Tighten motor mount bolts. 3. Replace spring
Abrasive belt keeps tearing	1. Belt is running in the wrong direction	1. The sanding belt should be running in the same direction as the rotation label.
Sanded edge not square	1. Table isn't square to sanding platen	1. Use a square to adjust table to the sanding platen
Sanding marks on workpiece	1. Workpiece is held still 2. Wrong grit sanding belt 3. Feed pressure too great 4. Sanding against the grain	1. Keep workpiece moving 2. Use coarser grit for stock removal and fine grit for finish sanding. 3. Never force the workpiece into sanding platen 4. Sand with the grain
Grains easily rub off belt.	1. Belt has been stored in damp environment. 2. Belt has been smashed or folded. 3. Replacement belt is too old.	1. Replace damaged belt. Store belt in a cool, dry area. 2. Replace damaged belt. Do not bend or fold belt. 3. Use new belt.
Deep sanding grooves or scratches in workpiece.	1. Excessive pressure while grinding. 2. Workpiece held still for too long against belt. 3. Belt too coarse. 4. Platen worn.	1. Reduce feed workpiece pressure. 2. Keep workpiece moving while grinding. 3. Use finer grit belt. 4. Replace platen.
Snake-shaped marks on workpiece.	1. Belt loaded up. 2. Belt damaged. 3. Platen worn.	1. Clean belt. 2. Replace belt. 3. Replace platen.
Belt clogs quickly.	1. Excessive pressure while grinding. 2. Belt worn or damaged. 3. Workpiece material is prone to belt clogging, such as soft aluminum.	1. Clean belt, and then reduce workpiece pressure. 2. Replace belt. 3. Reduce feed pressure. Use coarser-grit belt.

WARNING

Disconnect all power from the machine before servicing. There may be multiple power sources present. Remove the plug from the power point or remove the fuse if hardwired. Failure to do may cause death or injury.

MACHINERY HOUSE

BELT LINISHER SANDER

BS-76 & BS-152

ORDER CODE: (L119 & L120)

EDITION : 2.0
DATE: (05/24)

MACHINERYHOUSE

The following section covers the spare parts diagrams and lists that were current at the time this manual was originally printed. Due to continuous improvements of the machine, changes may be made at anytime without notification.

HOW TO ORDER SPARE PARTS

1. Have your machines model number, serial number & date of manufacture on hand, these can be found on the specification plate mounted on the machine.
2. A scanned copy of your parts list/diagram with required spare part/s identified.

NOTE: SOME PARTS MAY ONLY BE AVAILABLE AS AN ASSEMBLY

3. Go to www.machineryhouse.com.au/contactus and fill out the inquiry form attaching a copy of scanned parts list.

WARNING!
Electricity is dangerous and could cause death.
All electrical work must be carried out by a qualified electrician.

CAUTION!
It is impossible to cover all possible hazards Every workshop environment is different. These are designed as a guide to be used to compliment training and as a reminder to users prior to equipment use. Always consider safety first, as it applies to the individual working conditions.

WIRING DIAGAM FOR BS-76 & BS-152

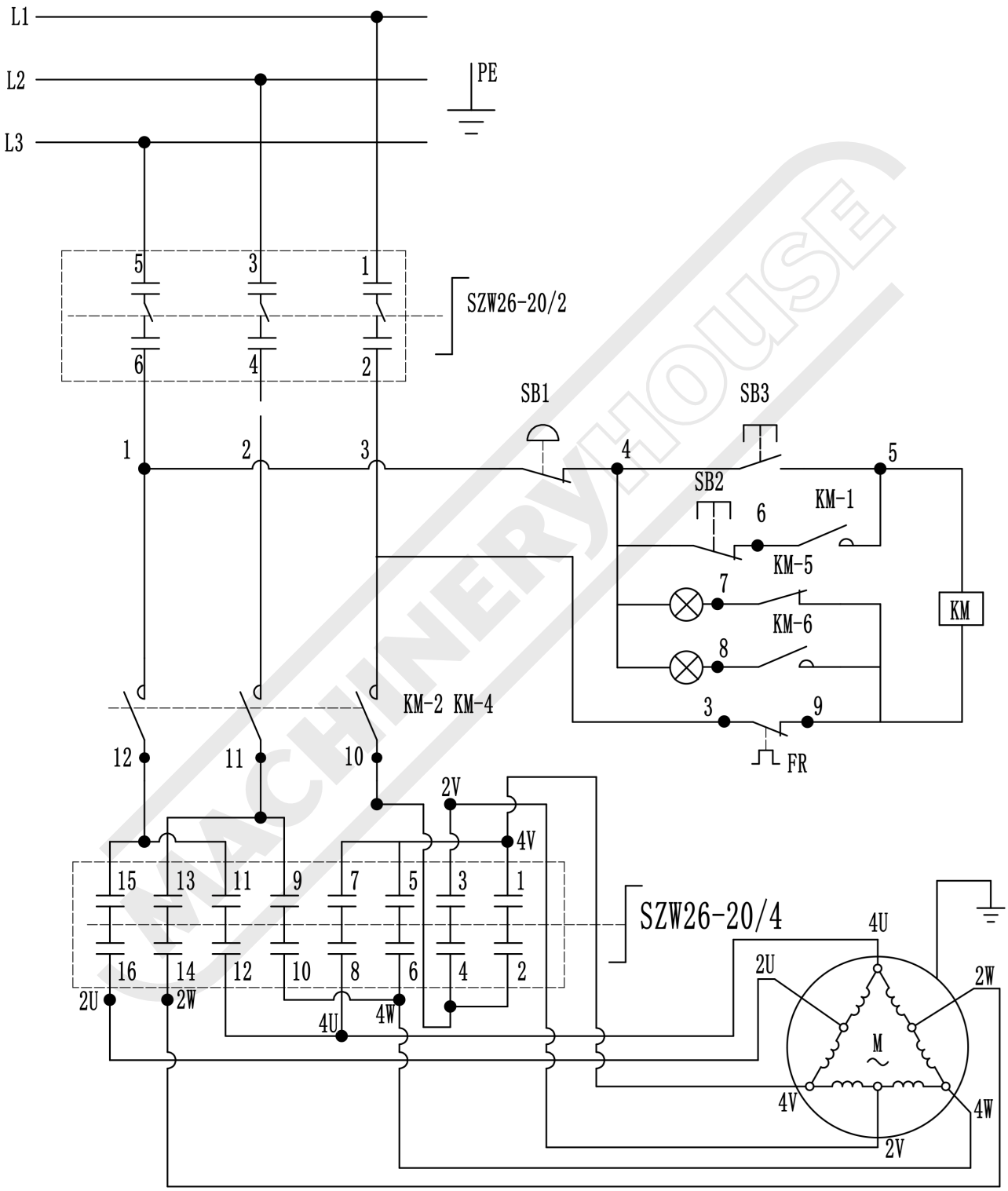

MACHINERY HOUSE

BS-76 PARTS DIAGRAM

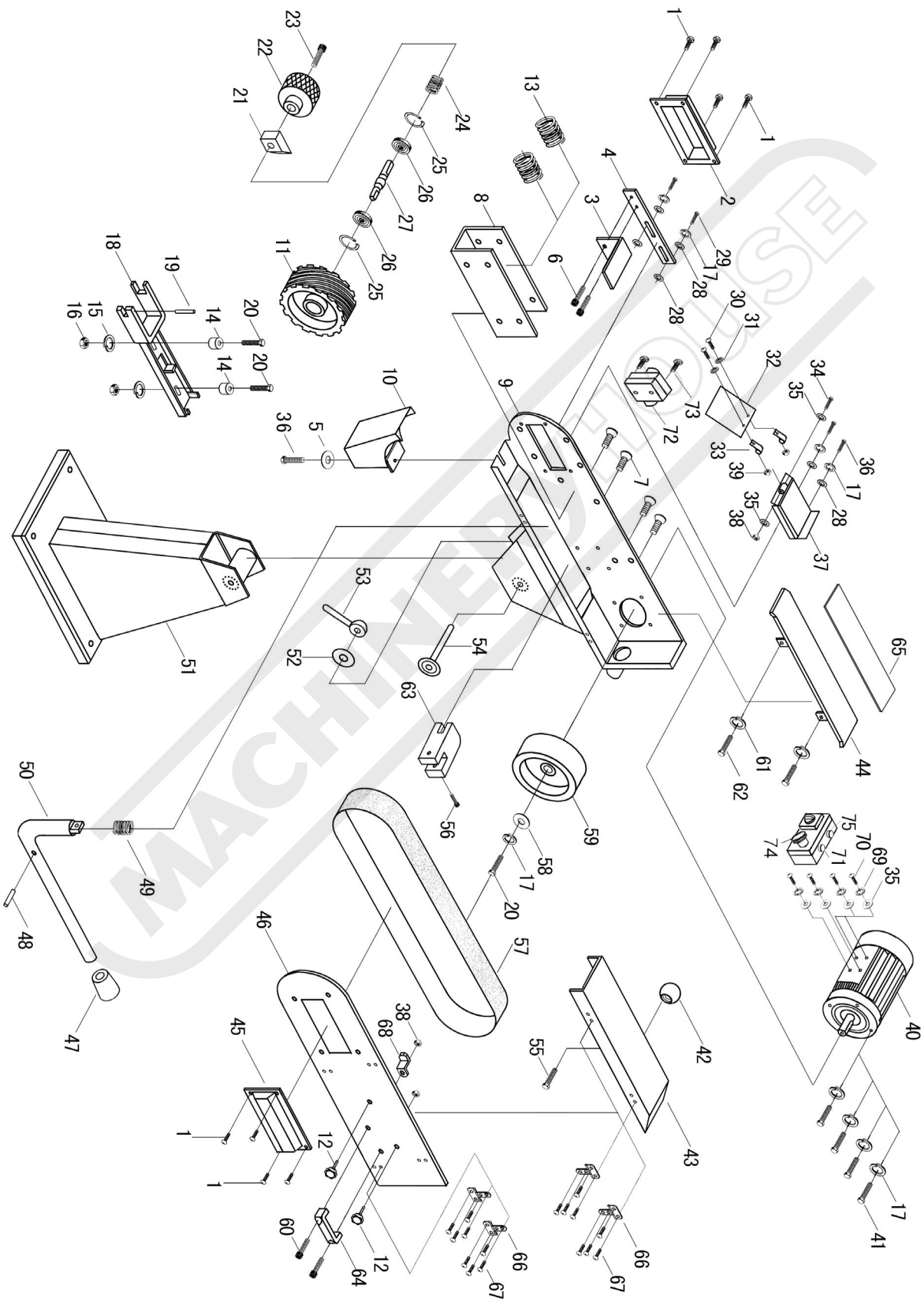

BS-152 PARTS LIST

ITEM	DESCRIPTION	QTY.
1	CUP HEAD SCREW M4X6	8
2	LEFT COVER	1
3	WORK TABLE	1
4	FIXATION BOARD OF WORK TABLE	1
5	WASHER	1
6	HEX. SOCKET COUNTERSUNK HEAD SCREW 8*10	2
7	HEX. SOCKET COUNTERSUNK HEAD SCREW 8*16	4
8	U-SUPPORT	1
9	BODY	1
10	DUST RECEIVER	1
11	DRIVEN WHEEL	1
12	STAR GRIP SCREW	2
13	SPRING	2
14	FLAT WASHER Ø8	2
15	FLAT FASHER Ø8	3
16	SELF-LOCKING NUT M8	2
17	NUT M8	2
18	DRIVEN WHEEL GUIDE	1
19	COLUMN PIN Ø6X50	1
20	BOLT M8X25	4
21	SHAFT BLOCK	1
22	HAND WHEEL	1
23	HEXAGONAL SOCKET SCREW M6X30	1
24	SPRING	1
25	RETAINING RING Ø47	2
26	BEARING 204	2
27	DRIVEN WHEEL SHAFT	1
28	FLAT WASHER Ø8	5
29	BOLT M8X25	2
30	CUP HEAD SCREW M4X10	2
31	FLAT WASHER Ø4	2
32	PERSPECTIVE PLATE	1
33	COLLECTING BOARD	2
34	CUP HEAD SCREW M6X50	1
35	FLAT WASHER Ø6	2
36	BOLT M8X12	3
37	FENCE EXTENSIONS	1
38	SELF-LOCKING NUT M6	2
39	NUT M4	2
40	MOTOR	1
41	BOLT M8X25	4
42	HAND BALL	1
43	SAFETY COVER	1
44	TOP TABLE	1
45	RIGHT COVER	1
46	SIDE FENCE	1
47	PROTECT TUBE	1
48	PIN 3X20	1
49	SPRING	1
50	HAND BAR	1
51	BASE	1
52	WASHER	1
53	LOCK KNOB	1
54	LOCK SHAFT	1
55	SCREW 6X16	1
56	HEXAGONAL SOCKET SCREW M5X20	1
57	SAND BELT	1
58	BIG WASHER Ø32	1
59	DRIVE WHEEL	1
60	CUP HEAD SCREW M8X20	2
61	ELASTIC WASHER Ø8	2
62	BOLT M8X12	2
63	HAND BAR COLLECTING ROD	1
64	HANDLE	1
65	BLACK LEAD PLATE	1
66	HINGE	4
67	CUP HEAD SCREW M4X6	16
68	SPRING PLATE	1
69	WASHER	4
70	SCREW	4
71	START SWITCH	1
72	SWITCH	1
73	SCREW	2
74	SWITCH	1
75	STOP SWITCH	1

MACHINERY HOUSE

BS-152 PARTS DIAGRAM

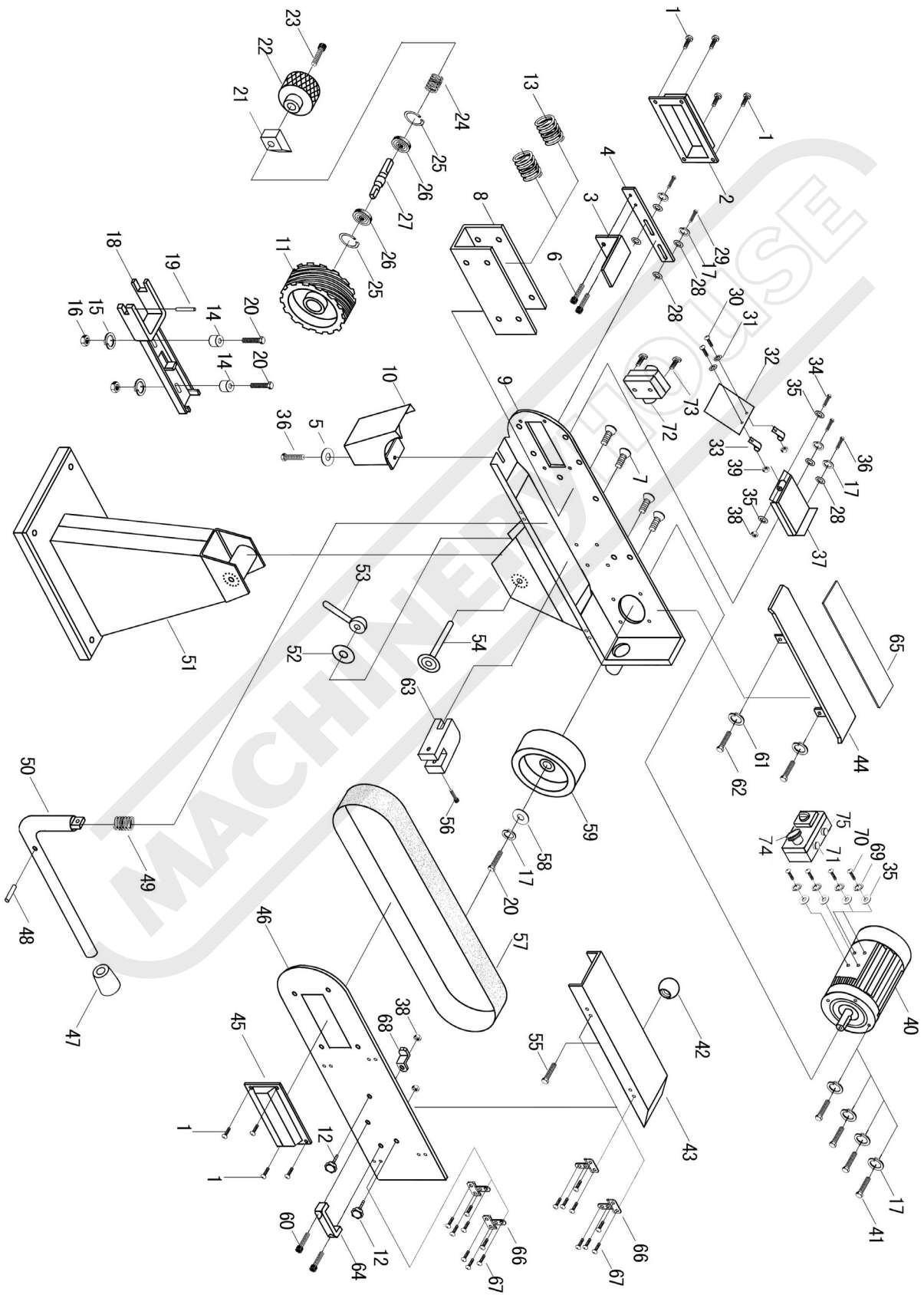

BS-152 PARTS LIST

ITEM	DESCRIPTION	QTY.
1	CUP HEAD SCREW M4X6	8
2	LEFT COVER	1
3	WORK TABLE	1
4	FIXATION BOARD OF WORK TABLE	1
5	WASHER	1
6	HEX. SOCKET COUNTERSUNK HEAD SCREW 8*10	2
7	HEX. SOCKET COUNTERSUNK HEAD SCREW 8*16	4
8	U-SUPPORT	1
9	BODY	1
10	DUST RECEIVER	1
11	DRIVEN WHEEL	1
12	STAR GRIP SCREW	2
13	SPRING	2
14	FLAT WASHER Ø8	2
15	FLAT FASHER Ø8	3
16	SELF-LOCKING NUT M8	2
17	NUT M8	2
18	DRIVEN WHEEL GUIDE	1
19	COLUMN PIN Ø6X50	1
20	BOLT M8X25	4
21	SHAFT BLOCK	1
22	HAND WHEEL	1
23	HEXAGONAL SOCKET SCREW M6X30	1
24	SPRING	1
25	RETAINING RING Ø47	2
26	BEARING 204	2
27	DRIVEN WHEEL SHAFT	1
28	FLAT WASHER Ø8	5
29	BOLT M8X25	2
30	CUP HEAD SCREW M4X10	2
31	FLAT WASHER Ø4	2
32	PERSPECTIVE PLATE	1
33	COLLECTING BOARD	2
34	CUP HEAD SCREW M6X50	1
35	FLAT WASHER Ø6	2
36	BOLT M8X12	3
37	FENCE EXTENSIONS	1
38	SELF-LOCKING NUT M6	2
39	NUT M4	2
40	MOTOR	1
41	BOLT M8X25	4
42	HAND BALL	1
43	SAFETY COVER	1
44	TOP TABLE	1
45	RIGHT COVER	1
46	SIDE FENCE	1
47	PROTECT TUBE	1
48	PIN 3X20	1
49	SPRING	1
50	HAND BAR	1
51	BASE	1
52	WASHER	1
53	LOCK KNOB	1
54	LOCK SHAFT	1
55	SCREW 6X16	1
56	HEXAGONAL SOCKET SCREW M5X20	1
57	SAND BELT	1
58	BIG WASHER Ø32	1
59	DRIVE WHEEL	1
60	CUP HEAD SCREW M8X20	2
61	ELASTIC WASHER Ø8	2
62	BOLT M8X12	2
63	HAND BAR COLLECTING ROD	1
64	HANDLE	1
65	BLACK LEAD PLATE	1
66	HINGE	4
67	CUP HEAD SCREW M4X6	16
68	SPRING PLATE	1
69	WASHER	4
70	SCREW	4
71	START SWITCH	1
72	SWITCH	1
73	SCREW	2
74	SWITCH	1
75	STOP SWITCH	1

MACHINERY HOUSE

⚠ WARNING

General Machinery Safety Instructions

Machinery House
requires you to read this entire Manual before using this machine.

1. **Read the entire Manual before starting machinery.** Machinery may cause serious injury if not correctly used.
2. **Always use correct hearing protection when operating machinery.** Machinery noise may cause permanent hearing damage.
3. **Machinery must never be used when tired, or under the influence of drugs or alcohol.** When running machinery you must be alert at all times.
4. **Wear correct Clothing.** At all times remove all loose clothing, necklaces, rings, jewelry, etc. Long hair must be contained in a hair net. Non-slip protective footwear must be worn.
5. **Always wear correct respirators around fumes or dust when operating machinery.** Machinery fumes & dust can cause serious respiratory illness. Dust extractors must be used where applicable.
6. **Always wear correct safety glasses.** When machining you must use the correct eye protection to prevent injuring your eyes.
7. **Keep work clean and make sure you have good lighting.** Cluttered and dark shadows may cause accidents.
8. **Personnel must be properly trained or well supervised when operating machinery.** Make sure you have clear and safe understanding of the machine you are operating.
9. **Keep children and visitors away.** Make sure children and visitors are at a safe distance for you work area.
10. **Keep your workshop childproof.** Use padlocks, Turn off master power switches and remove start switch keys.
11. **Never leave machine unattended.** Turn power off and wait till machine has come to a complete stop before leaving the machine unattended.
12. **Make a safe working environment.** Do not use machine in a damp, wet area, or where flammable or noxious fumes may exist.
13. **Disconnect main power before service machine.** Make sure power switch is in the off position before re-connecting.
14. **Use the Correct Extension Lead.** Extension leads should be avoided where possible but If required, always use an extension lead that is rated for the power requirements of your machinery. Using an incorrectly rated extension lead can lead to overheating, damage to machinery, or potential fire hazards. Ensure leads are in good condition and free of damage. Replace if faulty.
15. **Keep machine well maintained.** Keep blades sharp and clean for best and safest performance. Follow instructions when lubricating and changing accessories.
16. **Keep machine well guarded.** Make sure guards on machine are in place and are all working correctly.
17. **Do not overreach.** Keep proper footing and balance at all times.
18. **Secure workpiece.** Use clamps or a vice to hold the workpiece where practical. Keeping the workpiece secure will free up your hand to operate the machine and will protect hand from injury.
19. **Check machine over before operating.** Check machine for damaged parts, loose bolts, Keys and wrenches left on machine and any other conditions that may effect the machines operation. Repair and replace damaged parts.
20. **Use recommended accessories.** Refer to instruction manual or ask correct service officer when using accessories. The use of improper accessories may cause the risk of injury.
21. **Do not force machinery.** Work at the speed and capacity at which the machine or accessory was designed.
22. **Use correct lifting practice.** Always use the correct lifting methods when using machinery. Incorrect lifting methods can cause serious injury.
23. **Lock mobile bases.** Make sure any mobile bases are locked before using machine.
24. **Allergic reactions.** Certain metal shavings and cutting fluids may cause an ellergic reaction in people and animals, especially when cutting as the fumes can be inhaled. Make sure you know what type of metal and cutting fluid you will be exposed to and how to avoid contamination.
25. **Call for help.** If at any time you experience difficulties, stop the machine and call you nearest branch service department for help.

⚠ WARNING

Linisher/Disc Sander Safety Instructions

Machinery House
requires you to read this entire Manual before using this machine.

1. **Maintenance.** Make sure the sander is turned off and disconnect from the main power supply and make sure all moving parts have come to a complete stop before any inspection, adjustment or maintenance is carried out.

2. **Sander Condition.** Sander must be maintained for a proper working condition. Never operate a sander that has damaged or worn parts. Scheduled routine maintenance should performed on a scheduled basis.

3. **Disc/Belt Condition.** Never operate a sander with a damaged or badly worn disc or belt. Replace if required.

4. **Disc/Belt Rotation.** Be aware of the Disc and Belt rotation when sanding.

5. **Hand Hazard.** Keep hands and fingers clear from moving parts. Serious injury can occur.

6. **Leaving a sander Unattended.** Always turn the sander off and make sure all moving parts have come to a complete stop before leaving the sander. Do not leave sander running unattended for any reason.

7. **Avoiding Entanglement.** Sander guards must be used at all times. Remove loose clothing, belts, or jewelry items. Never wear gloves while machine is in operation. Tie up long hair and use the correct hair nets to avoid any entanglement with the sander moving parts.

8. **Understand the machines controls.** Make sure you understand the use and operation of all controls.

9. **Power outage.** In the event of a power failure during use of the Linisher, turn off all switches to avoid possible sudden start up once power is restored.

10. **Work area hazards.** Keep the area around the sander clean from oil, tools, chips. Pay attention to other persons in the area and know what is going on around the area to ensure unintended accidents.

11. **Workpiece Handling.** Never hold small workpieces with your fingers during a cut. Always support/feed the workpiece with push stick, table support, vice, or some sort of clamping fixture.

12. **Hearing protection and hazards.** Always wear hearing protection as noise generated from sander and workpiece vibration can cause permanent hearing loss over time.

13. **Dust hazards.** Always wear dust mask or respirator and eye protection when sanding. Use a dust collector as well to keep dust to a minimum.

14. **Feeding material.** Always feed material evenly and smoothly against the direction of rotation. Never use excessive force when sanding or serious injury can occur.

15. **Job Material.** Check material prior to sanding for nails, staple and other objects that make cause any danger when sanding.

16. **Starting position/speed.** Never turn the sander on when the workpiece is resting on the disc or belt. Allow disc and belt to reach full speed before sanding.

17. **Disc sanding.** Keep workpiece down toward the table whilst sanding. Workpiece may cause serious injury if not held correctly.

18. **Guards.** Do not operate sander without the correct guards in place.

19. **Stopping the Disc/Belt.** Do not stop or slow the Disc or Belt with your hand or workpiece. Allow the machine to stop on its own.

20. **Wood dust may cause allergic reactions.** Make sure you know what type of dust you are exposed to as it may cause you an allergic reaction. Always wear an approved respirator.

21. **Call for help.** If at any time you experience difficulties, stop the machine and call you nearest branch service department for help.

PLANT SAFETY PROGRAM

NEW MACHINERY HAZARD IDENTIFICATION, ASSESSMENT & CONTROL

Linisher-Disc Sander

Developed in Co-operation Between A.W.I.S.A and Australia Chamber of Manufactures
This program is based upon the Safe Work Australia, Code of Practice - Managing Risks of Plant in the Workplace (WHSA 2011 No10)

Item No.	Hazard Identification	Hazard Assessment	Risk Control Strategies (Recommended for Purchase / Buyer / User)
A	ENTANGLEMENT	HIGH	Eliminate, avoid loose clothing / Long hair etc.
C D	CUTTING, STABBING, PUNCTURING SHEARING	MEDIUM MEDIUM	Isolate power to machine prior to any checks or maintenance being carried out. Do not adjust or clean machine until the machine has fully stopped. Always keep gap between table and disc to a minimum. Make sure all guard are secured shut when machine is on.
E	FRICTION	MEDIUM	Keep hands and body clear from sanding disc/belt.
F	STRIKING	MEDIUM	Wear appropriate protective clothing. Wear safety glasses. Stand clear of moving parts on machine. Remove all loose objects around moving parts. Ensure belts are in good condition and at correct tension. Always sand on the down stroke of the disc's rotation.
H	ELECTRICAL	MEDIUM	All electrical enclosures should only be opened with a tool that is not to be kept with the machine.
O	OTHER HAZARDS, NOISE, DUST.	LOW	Wear hearing protection as required. Must be connected to a dust extraction.
Plant Safety Program to be read in conjunction with manufactures instructions			

HARE&FORBES MACHINERYHOUSE

www.machineryhouse.com.au

MACHINERYHOUSE

www.machineryhouse.co.nz

Authorised and signed by:
Safety officer:.....
Manager:.....

Revised Date: 12th March 2012

NOTES:

MACHINERY HOUSE

ENVIRONMENT PROTECTION

Recycle unwanted materials instead of disposing of them as waste. All tools, accessories and packaging should be sorted, taken to a recycling centre and disposed of in a manner which is compatible with the environment. When the product becomes completely unserviceable and requires disposal, drain any fluids (if applicable) into approved containers and dispose of the product and fluids according to local regulations.

MACHINERYHOUSE

IMPORTED BY

HARE & FORBES MACHINERYHOUSE

Australian Distributor

Hare & Forbes Machineryhouse
Sydney - Melbourne
Adelaide - Brisbane - Perth

Ph: 1300 202 200
www.machineryhouse.com.au

MACHINERYHOUSE

New Zealand Distributor

Machineryhouse
Auckland
Christchurch

Ph: 0800 142 326
www.machineryhouse.co.nz