20/11/08

L670D	L672D	L673D
DL-90/1500	DL-100/2000	DL-100/3000
(CDS6250C/1500)	(CDS6266C/2000)	(CDS6266C/3000)

DALIAN LATHES

OPERATION
AND SPARE PARTS MANUAL

Illustrations and specifications are not binding in detail. The designs are subject to modification without notice.

CE

DMTG

CDS6240A
CDS6240B、CDS6250B、CDS6256B、CDS6266B、CDS6276B、
CDS6240C、CDS6250C、CDS6256C、CDS6266C、CDS6276C

DMTG

universal Lathe
Gap-Bed Lathe

Operating Manual

Dalian Machine Tool Group Corp. **2007.1**

Address:38Anshan Road,Dalian 113022,P.R.C
Tel:+86-411-83637554/83637661/83630767
Fax:+86-411-83646795
E-mail:sales@dmtg.com.cn
http//www.dmtg.com

Dalian Machine Tool Group Corp.
The People's Republic of China

CE



大 连 机 床 装 备 世 界

Your Global Manufacturing Partner

说　明

此《备件说明书—Purchase Parts》 是特别为用户提供的技术文件，供用户进行机床维修时使用，它提供了DMTG 生产CDS系列卧式车床的主机零部件及附件，特殊附件等技术信息。

此《备件说明书—Purchase Parts》不能作为CDS系列卧式车床定货的依据，而且不能包含该产品的全部内容，以及为个别用户特殊定制的机床。

此《备件说明书—Purchase Parts》不包含CDS系列卧式车床的电气控制技术信息。CDS系列卧式车床的电气控制技术信息见本机床的《使用说明书》中相关内容。

当按此《备件说明书—Purchase Parts》订购备件时，请提供机床的型号，规格，离合器形式， 电源频率，以及零部件的名称、零件编号、数量等信息。

NOTE

The <Purchase Parts>, is the technical documents special for the maintanence of machines. It lists the technical infomation of the main machine parts,accessories and special accessories for the DMTG's CDS series lathes.

The <Purchase Parts> is not the final accordance for your actual order.The parts you ordered are just one part of this manual. Especically not fit for the special-designed machine for some users.

The <Purchase Parts> does not contain infomation for electrical control system of the lathes, which can be found in the relevant chapter in the operating manual.

When you order the purchase Parts using the <Purchase Parts> ,please give informations of the machine type,size,cluth style,frequency of the machine,and parts number,description, qty ,ect.

目 录 CONTENTS

床身	BED	1
操纵系统	OPERATING SYS-MECHANICAL CLUTCH	4
操纵系统	OPERATING SYS-ELECTRAL-MAGNETIC CLUTCH	7
床尾	TAILSTOCK	10
电机装置及油箱	MOTOR AND TANK ASSEMPLY	12
脚踏制动	FOOT BRAKE	15
床头箱	HEADSTOCK	17
溜板箱	APRON	35
进给箱	GEAR BOX	44
挂轮装置	CHANGE GEARS	48
四方刀架	TOOLPOST	61
快换刀架	QCT POSTS (USA STYLE)	63
快换刀架	QCT POSTS (DEUTSCHLAND STYLE)	65
快换刀架	QCT POSTS (ITALY STYLE)	67
床鞍	SADDLE	69
车锥装置	TAPER TURNNING ACCESSRIES	72
手动泵	MANUAL PUMP	74
工具及附件	TOOLS and ACCESSRIES	75
拨盘	DRIVE PLATE	78
平面盘	FACE PLATE	84
中心架	STEADY REST	90
大孔中心架	BIG HOLE STEADY REST	92
跟刀架	FOLLOWER REST	94
大孔跟刀架	BIG HOLE FOLLOWER REST	96
乱扣盘	THREAD DIAL INDICATOR	98
卡盘防护	CHUCK GUARD	100
刀架防护	CHIP GUARD	102
后防护	REAR GUARD	104
纵向碰停装置	LONGNITUDINAL STOP ACCESSRIES	108

床身 Bed

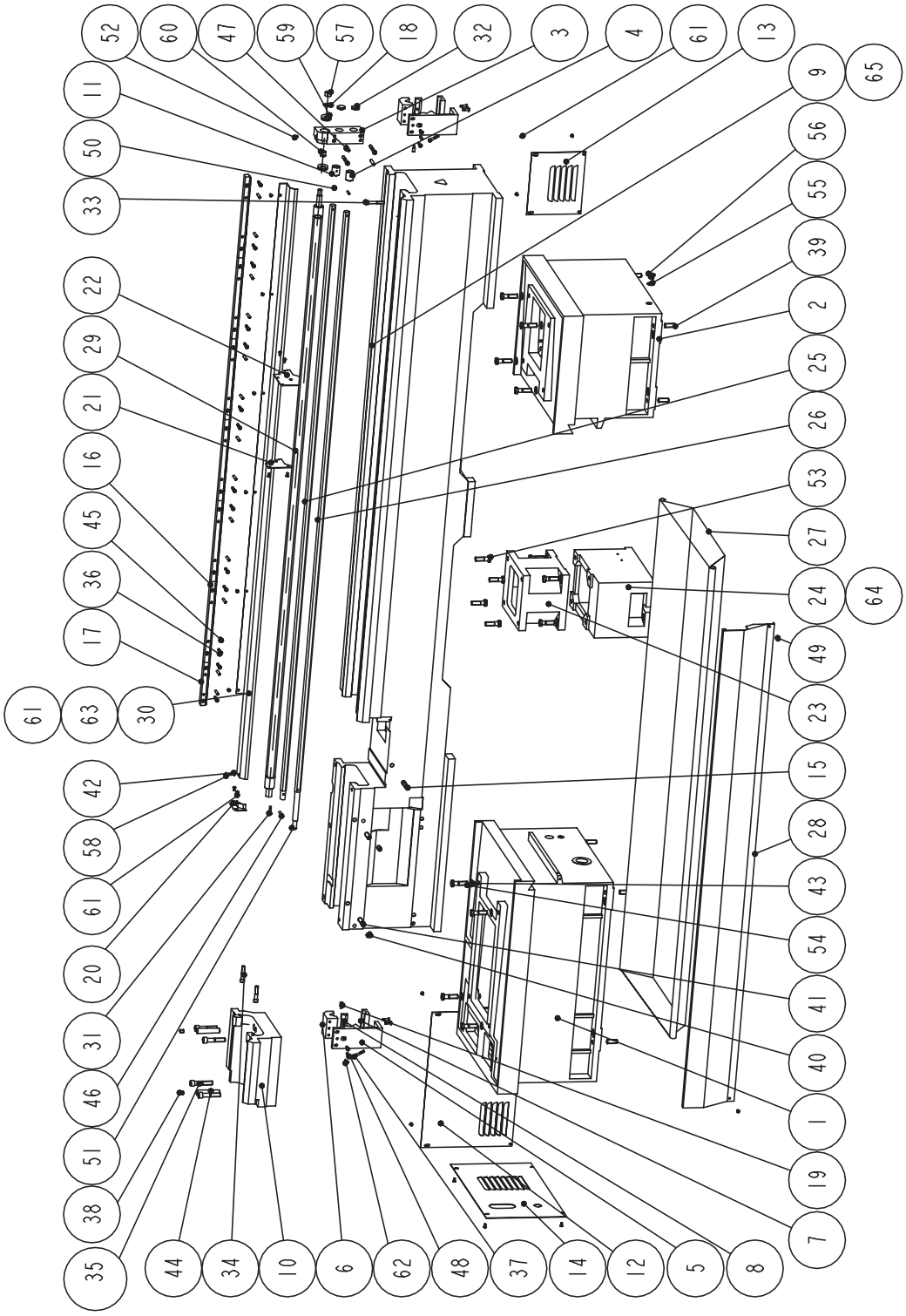
52
60
47
59
57
18
32
3
4
61
13
11
50
33
9
65
56
55
39
22
29
21
16
45
36
17
2
25
26
53
27
24
64
49
23
61
63
30
15
42
58
61
20
31
46
51
38
35
28
43
54
41
40
1
19
7
44
34
10
6
62
48
37
14
12
5
8

床身 Bed

序号 Item	零件编号 Part Number	零件名称 Description	数量 Qty	备注 Remark
1	CDS-10102	前床腿 Front plinth	1	
2	CDS-10103	后床腿 Back plinth	1	
3	CDS-10104	瓦架 Bracket	1	
4	CDS-10106	套 Bush	1	
5	CDS-10124	中托架 Medi-bracket	2	3000mm
6	CDS-10125	上托架 Up-bracket	2	3000mm
7	CDS-10126	下托架 Down-bracket	2	3000mm
8	CDS-10127	压板 Plate	2	3000mm
9	CDS-10130	马鞍床身 Gap-bed	1	750/1000/1500/2000/2200/3000mm
10	CDS-10131	马鞍 Gap piece	1	
11	CDS-10301	套 Bush	1	
12	CDS-10704	前床腿后通风板 Plate	1	
13	CDS-10705	后床腿后通风板 Plate	1	
14	CDS-10709	通风板 Plate	1	
15	CDS-10710	挡销 Pin	1	
16	CDS-10711	齿条 Rack 368 mm	2~8	
17	CDS-10712	齿条 Rack 195mm	1~2	
18	CDS-10715	垫圈 Washer	1	
19	CDS-10716	销 Pin	2	3000mm
20	CDS-85702	安装板 Support	1	
21	CDS-85703	挡板 Plate	2	
22	CDS-10705	挡板 Plate	1	
23	CDS-10110/2000	中床腿垫 Medi-bracket	1	2000、2200mm
24	CDS-10111/2000	中床腿 Medi-plinth	1	2000、2200mm
25	CDS-10701	进给杠 Feedshaft	1	
26	CDS-10702	启动杠 Third-shaft	1	
27	CDS-10706	油盘 Waste Storage	1	
28	CDS-10707	前挡板 Plate	1	
29	CDS-10703	公制丝杠 Leadscrew-metric	1	750,1000,1500,2000,2200 & 3000mm
	CDS-10714	英制丝杠 Leadscrew-imperial	1	750,1000,1500,2000,2200 & 3000mm
30	CDS-85704	丝杠防护 Cover	1	马鞍床身用 for gap bed machine
31	6X35;DB1401	键 Key	1	
32	32n6;Q56-1	堵 Plug	1	
33	M10X70;GB70	螺钉 Screw	3	
34	M12X60;GB70	螺钉 Screw	2	

Bed

序号 Item	零件编号 Part Number	零件名称 Description		数量 Qty	备注 Remark
35	M16X80; GB70	螺钉	Screw	4	
36	M8X35; GB70	螺钉	Screw	6 ~24	
37	M8X65; GB70	螺钉	Screw	2	3000mm
38	M12X16; GB77	螺钉	Screw	2	
39	M16X45; GB77	螺钉	Screw	6	
40	M16X30; GB78	螺钉	Screw	2	
41	M16X50; GB78	螺钉	Screw	2	
42	5-Zn; GB96	垫圈	Washer	1	
43	16; GB97.1	垫圈	Washer	4 ~16	
44	A 20X100; GB118	销	Pin	2	
45	A 8X40; GB118	销	Pin	4 ~16	
46	A 8X40; GB119	销	Pin	1	
47	B 10X50; GB120	销	Pin	2	
48	B 8X26; GB120	销	Pin	2	
49	M16X12; GB818	螺钉	Screw	2	
50	6X30; GB879	销	Pin	2	
51	16; GB94.1	挡圈	Circlip	1	
52	10; GB1155	油杯	Nipple Oil	1	
53	M16X55; GB5782	螺栓	Bolt	8	
54	M16X60; GB5782	螺栓	Bolt	8/12	
55	22; JB982	垫圈	Washer	1	
56	M22X1.5; JB1001	油塞	Oil Plug	1	
57	M16; GB889	螺母	Nut	1	
58	M6X8; FS-0291	螺钉	Screw	1	
59	20X40X14; 51204	轴承	Bearing	2	
60	2020DU	含油衬套	DU-Bush	1	
61	M6X12; FS-0294	螺钉	Screw	24	
62	M8X25; FS-0310	螺钉	Screw	8	
63	CDS-85701	丝杠防护	Cover	1	直床身用 for straight bed machine
64	CDS-10112/3000	中床腿	Medi-plinth	1	3000mm
65	CDS-10101	普通床身	Straight Bed	1	750/1000/1500/2000/3000mm

操纵系统 OPERATING SYS-MECHANICAL CLUTCH

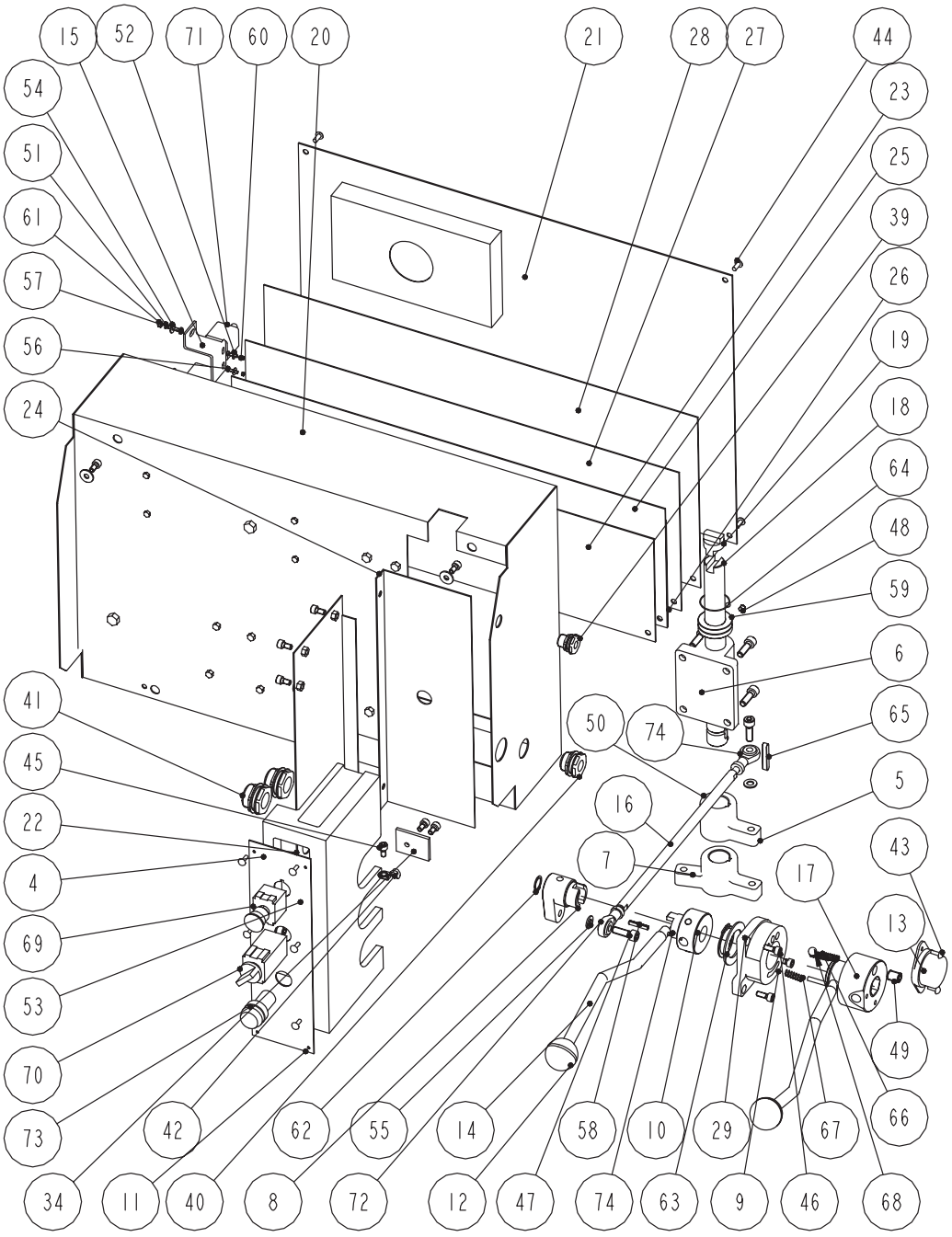

操纵系统 OPERATING SYS-MECHANICAL CLUTCH

序号 Item	零件编号 Part Number	零件名称 Description	数量 Qty	备注 Remark
4	CDS-11101	走刀箱右板 RIGHT COVER	1	
5	CDS-11102	连接头 JOINING	1	
6	CDS-11103	转轴座 BRACKET	1	
7	CDS-11104	连接头 JOINING	1	特殊订货 OPTION
8	CDS-11105	连接头 JOINING	1	
9	CDS-11106	手柄座 BRACKET	1	
10	CDS-11107	连接套 SLEEVE	1	
11	CDS-11301	标牌 NAME PLATE	1	
12	CDS-11501	手柄球 BALLS	2	
13	CDS-11502	丝杠盖 END COVER	1	
14	CDS-11701	手柄杆 LEVER	2	
15	CDS-11704	开关板 SWT BRACKET	1	不背柜时用 USED FOR NO-CABINIC MACHINE
16	CDS-11705	连杆 LINK	1	
17	CDS-11706	手柄座 BRACKET	1	
18	CDS-11707	转轴 SHAFT	1	
19	CDS-11708	十字节 CROSSHEAD	1	
20	CDS-11709	护罩 BOX	1	
21	CDS-11710	门 REAR COVER	1	不背柜时用 USED FOR NO-CABINIC MACHINE
22	CDS-11711	隔板 CLAPBORD	1	不背柜时用 USED FOR NO-CABINIC MACHINE
23	CDS-11712	门 REAR COVER	1	背柜时用 CDS6140-6240 USED FOR MACHINE WITH CABINIC
24	CDS-11714	隔板 CLAPBORD	1	不背柜时用 USED FOR NO-CABINIC MACHINE
25	CDS-11715	门 REAR COVER	1	背柜时用 CDS6150-6250 USED FOR MACHINE WITH CABINIC
26	CDS-11716	门 REAR COVER	1	背柜时用 CDS6156-6256 USED FOR MACHINE WITH CABINIC
27	CDS-11717	门 REAR COVER	1	背柜时用 CDS6166-6266 USED FOR MACHINE WITH CABINIC
28	CDS-11718	门 REAR COVER	1	背柜时用 CDS6176-6276 USED FOR MACHINE WITH CABINIC
29	CDS-11725	垫圈 WASHER	1	
39	M16X1.5;D88-4	保护套 PROTECTOR	1	
40	M24X1.5;D88-4	保护套 PROTECTOR	1	
41	M30X2;D88-4	保护套 PROTECTOR	2	

操纵系统 OPERATING SYS-MECHANICAL CLUTCH

序号 Item	零件编号 Part Number	零件名称 Description	数量 Qty
42	10;DB1691	管夹 CLAMP	1
43	M4X12;FS-0278	螺钉 SCREW	8
44	M5X12;FS-0298	螺钉 SCREW	4
45	M6X12;GB70	螺钉 SCREW	12
46	M6X16;GB70	螺钉 SCREW	3
47	M8X25;GB70	螺钉 SCREW	8
48	M6X8;GB71	螺钉 SCREW	1
49	M12X16;GB77	螺钉 SCREW	1
50	M8X16;GB79	螺钉 SCREW	2
51	4-Zn;GB93	垫圈 BACKING RING	2
52	3-Zn;GB96	垫圈 BACKING RING	2
53	6;GB96	垫圈 BACKING RING	8
54	4-Zn;GB96	垫圈 BACKING RING	2
55	8;GB97.1	垫圈 BACKING RING	2
56	M3X12-Zn;GB818	螺钉 SCREW	2
57	M4X16-Zn;GB818	螺钉 SCREW	2
58	5X26;GB879	销 PINS	2
59	25;GB885	挡圈	1
60	M3-Zn;GB889	螺母 NUT	2
61	M4-Zn;GB889	螺母 NUT	2
62	16;GB894.1	挡圈	1
63	36;GB894.1	挡圈	1
64	35;GB921	锁圈	1
65	6X40;GB1096	键 DRIVING MEDIUM	1
66	1.6X12X28;GB2089	弹簧 SPRING	1
67	1.2X7X25;GB2089	弹簧 SPRING	2
68	10;GB308	钢球 STEEL BALL	1
69	LA89J-01ZS/2-22R	急停按钮 ESP BUTTON	1
70	LA89J-10X/2-22K	水泵旋钮 PUMP BUTTON	1
71	LXW3	开关 SWITCH	1
72	M8-6H;SIBK8S/Q	关节轴承 JOINT BEARING	2
73	VD16-22B/W23	信号灯 SIGNAL LAMP	1
74	M8-L-6H;SIBK8S/Q	关节轴承 JOINT BEARING lefthand screw	1

操纵系统 OPERATING SYS-ELECTRAL-MAGNETIC CLUTCH

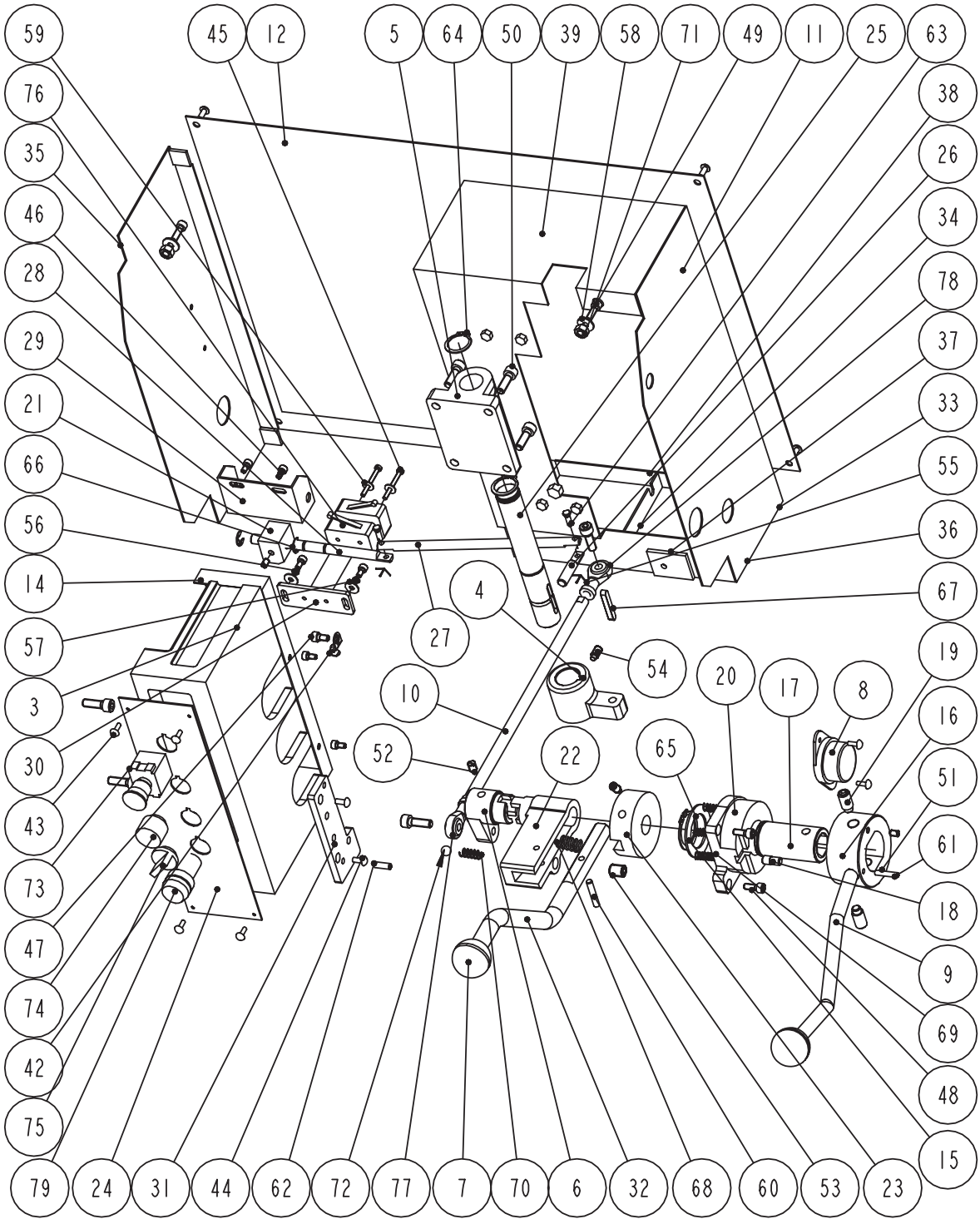

操纵系统 OPERATING SYS-ELECTRAL-MAGNETIC CLUTCH

序号 Item	零件编号 Part Number	零件名称 Description	数量 Qty	备注 Remark
3	CDS-11101	走刀箱右板 RIGHT COVER	1	
4	CDS-11102	连接头 JOINING	1	
5	CDS-11103	转轴座 BRACKET	1	
6	CDS-11105	连接头 JOINING	1	
7	CDS-11501	手柄球 BALLS	2	
8	CDS-11502	丝杠盖 END COVER	1	
9	CDS-11701	手柄杆 LEVER	1	
10	CDS-11705	连杆 LINK	1	
11	CDS-11709	护罩 BOX	1	
12	CDS-11712	门 REAR COVER	1	背柜时用 CDS6140-6240 USED FOR MACHINE WITH CABINIC
	CDS-11715	门 REAR COVER	1	背柜时用 CDS6150-6250 USED FOR MACHINE WITH CABINIC
	CDS-11716	门 REAR COVER	1	背柜时用 CDS6156-6256 USED FOR MACHINE WITH CABINIC
	CDS-11717	门 REAR COVER	1	背柜时用 CDS6166-6266 USED FOR MACHINE WITH CABINIC
	CDS-11718	门 REAR COVER	1	背柜时用 CDS6176-6276 USED FOR MACHINE WITH CABINIC
14	CDS-11722	防护板 COVER	1	
15	CDS-11725	垫圈 WASHER	1	
16	CDS-11726	手柄座 BRACKET	1	
17	CDS-11727	套筒 SLEEVE	1	
18	CDS-11728	销 DOG PIN	1	
19	CDS-11729	螺钉 SCREW	2	
20	CDS-12101	手柄座 BRACKET	1	
21	CDS-12102	凸块 CAM OF SWT	1	
22	CDS-12103	手柄座 LEVER HOUSE	1	
23	CDS-12104	锁盘 LOCH DISC	1	
24	CDS-12301	标牌 NAME PLATE	1	
25	CDS-12701	转轴 SHAFT	1	
26	CDS-12702	杆 ROD	1	
27	CDS-12703	连杆 LINK	1	
28	CDS-12704	导杆 ROD	1	
29	CDS-12705	支架 BRACHET	1	
30	CDS-12706	开关垫板 PLATE	1	
31	CDS-12707	定位板 PLATE	1	

操纵系统 OPERATING SYS-ELECTRAL-MAGNETIC CLUTCH

序号 Item	零件编号 Part Number	零件名称 Description	数量 Qty	序号 Item	零件编号 Part Number	零件名称 Description	数量 Qty
32	CDS-12708	手柄杆 LEVER	1	63	B5X16;GB882	销轴 PINS	2
				64	25;GB894.1	挡圈 CIRCLIP	2
42	10;DB1691	管夹 CLAMP	1	65	36;GB894.1	挡圈 CIRCLIP	1
43	M4X12;FS-0278	螺钉 SCREW	8	66	8;GB896	挡圈 CIRCLIP	2
44	M5X12;FS-0298	螺钉 SCREW	6	67	6X40;GB1096	键 KEY	1
45	M4X40;GB65	螺钉 SCREW	2	68	1.6X12X28;GB2089	弹簧 SPRING	1
46	M5X10;GB70	螺钉 SCREW	6	69	1X7X25;GB2089	弹簧 SPRING	4
47	M6X12;GB70	螺钉 SCREW	1	70	1X8X22;GB2089	弹簧 SPRING	1
48	M6X16;GB70	螺钉 SCREW	3	71	M8;GB6170	螺母 NUT	3
49	M6X20;GB70	螺钉 SCREW	2	72	10;GB308	钢球 STEEL BALL	1
50	M8X25;GB70	螺钉 SCREW	8	73	LA89J-01ZS/2-22R	急停按钮 ESP BUTTON	1
51	M6X10;GB71	螺钉 SCREW	3	74	LA89J-10-22K	制动释放旋钮 BRAKE RELEASE ESP BUTTON	1
52	M8X12;GB71	螺钉 SCREW	1	75	LA89J-10X/2-22K	水泵旋钮 PUMP BUTTON	1
53	M12X16;GB77	螺钉 SCREW	1	76	LXW5-11G3	开关 SWITCH	2
54	M8X16;GB79	螺钉 SCREW	2	77	M8-6H;SIBK8S/Q	关节轴承 JOINT BEARING	1
55	1X16;GB91	销 PINS	2	78	M8左-6H;SIBK8S/Q	关节轴承 JOINT BEARING lefthand screw	1
56	5;GB93	垫圈 BACKING RING	2	79	VD16-22B/W23	信号灯 SIGNAL LAMP	1
57	5;GB96	垫圈 BACKING RING	2				
58	6;GB96	垫圈 BACKING RING	2				
59	4;GB96	垫圈 BACKING RING	2				
60	A6X35;GB119	销 PINS	1				
61	5X26;GB879	销 PINS	1				
62	6X18;GB879	销 PINS	1				

尾　座 TAILSTOCK

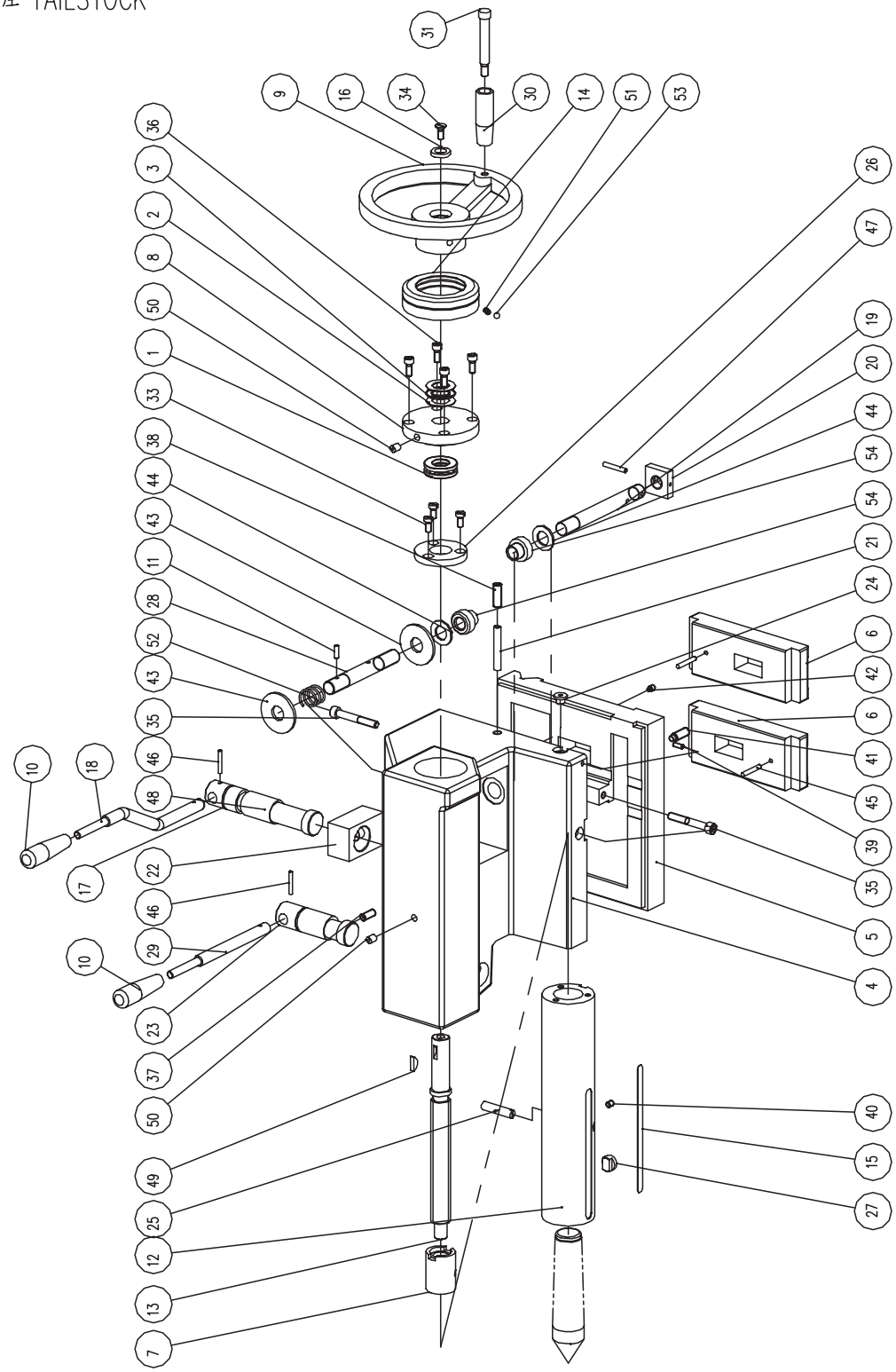

尾　座 TAILSTOCK

序号 Item	零件编号 Part Number	零件名称 Description	数量 Qty	序号 Item	零件编号 Part Number	零件名称 Description	数量 Qty
1	25X47X15；8205	轴　承 Bearing	1	24	CDS-13715	标记堵 Sign stem	1
2	AS2542	推力垫圈 Washer	2	25	CDS-13716	小轴 Stud	1
3	AXK2542	推力轴承Push bearing	1	26	CDS-13717	法兰盘 Flange tray	1
4	CDS-13101	尾座体 Tailstock body	1	27	CDS-13718	键 Key	1
5	CDS-13102(400)	底座 base	1	28	CDS-13720(400)	双头螺栓 Stud	1
	CDS-13112(500)	底座 base	1		CDS-13732(500)	双头螺栓 Stud	1
	CDS-13114(560)	底座 base	1		CDS-13734(560)	双头螺栓 Stud	1
	CDS-13116(660)	底座 base	1		CDS-13736(660)	双头螺栓 Stud	1
	CDS-13118(760)	底座 base	1		CDS-13738(760)	双头螺栓 Stud	1
6	CDS-13103	压板 Push plate	2	29	CDS-13721	手柄杆 Lever stud	1
7	CDS-13104	螺母 Nut,Metric	1	30	CDS-26501	手柄 Handgrip	1
	CDS-13111	螺母 Nut,Metric	1	31	CDS-26770	手柄螺钉Handgrip Screw	1
8	CDS-13105	法兰盘 Flange tray	1	33	M8X16；GB65	螺　钉 Screw	3
9	CDS-13107	手　轮 Handwheel	1	34	M8X20；FS-0448	螺　钉 Screw	1
10	CDS-13501	手　柄 Handgrip	2	35	M10X70；GB70	螺　钉 Screw	2
11	CDS-13502	锁紧块 Lock block	1	36	M8X20；GB70	螺　钉 Screw	4
12	CDS-13701	尾座套筒 Tailstock barrel	1	37	M10X25；GB77	螺　钉 Screw	1
13	CDS-13702	丝杆 Leadscrew,Inch	1	38	M12X35；GB77	螺　钉 Screw	1
	CDS-13703	丝杆 Leadscrew,Metric	1	39	M6X16；GB77	螺　钉 Screw	1
14	CDS-13704	刻度环 Index ring,M	1	40	M8X10；GB77	螺　钉 Screw	1
	CDS-13714	刻度环 Index ring,Inch	1	41	M12X35；GB79	螺　钉 Screw	1
	CDS-13719	刻度环 Index ring	1	42	M8X12；GB79	螺　钉 Screw	1
	CDS-40726	指针 Index	1	43	20-Zn；GB96	垫　圈 Washer	2
15	CDS-13705	刻度尺 Index ruler	1	44	20-Zn；GB97.1	垫　圈 Washer	2
16	CDS-13706	垫　圈 Washer	1	45	A 6X40；GB119	销 Pins	2
17	CDS-13707	偏心轴 Eccentric shaft	1	46	5X35；GB879	销 Pins	2
18	CDS-13708	锁紧杆 Lock lever	1	47	6X40；GB879	销 Pins	1
19	CDS-13709(400)	双头螺栓 Stud	1	48	8X30；GB879	销 Pins	1
	CDS-13731(500)	双头螺栓 Stud	1	49	6X22；GB1099	键 Key	1
	CDS-13733(560)	双头螺栓 Stud	1	50	10；GB1155	油　杯 Oil cup	2
	CDS-13735(660)	双头螺栓 Stud	1	51	0.6X6X15；GB2089	弹　簧 Spring	3
	CDS-13737(760)	双头螺栓 Stud	1	52	2.5X25X35;GB2089(400、500)	弹　簧 Spring	1
20	CDS-13710	板 Plate	1		2.5X25X65;GB2089(560、660)	弹　簧 Spring	1
21	CDS-13711	顶销 Jack pin	1		2.5X25X140；GB2089(760)	弹　簧 Spring	1
22	CDS-13712	夹紧块 Clamp block	1	53	8；GB308-64	钢　球 Steel ball	3
23	CDS-13713	偏心轴 Eccentric shaft	1	54	M20-Zn；GB889	螺　母 Nut	2

电机装置及油箱 MOTOR AND TANK ASSEMPLY

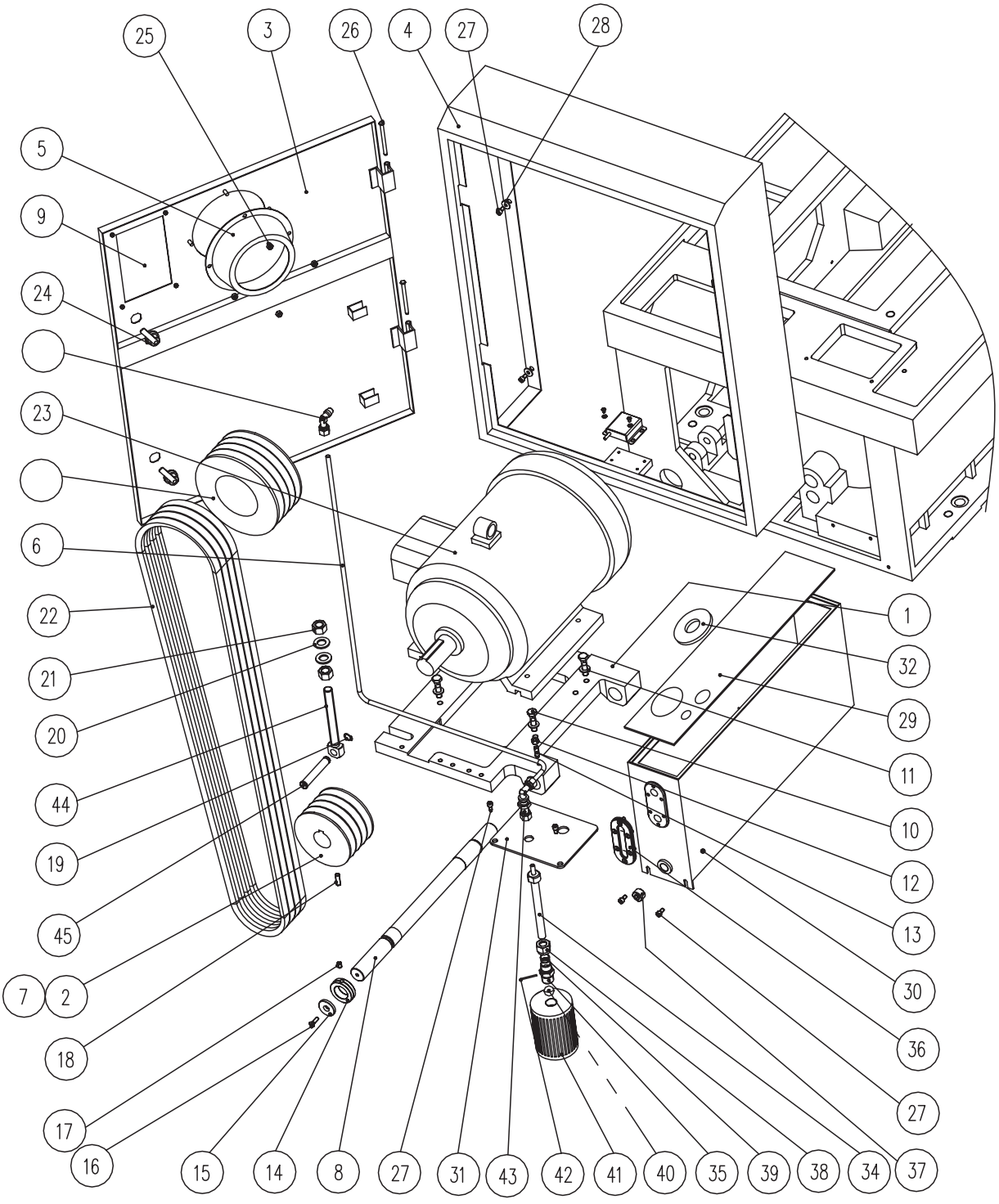

电机装置及油箱 MOTOR AND TANK ASSEMPLY

序号 Item	零件编号 Part Number	零件名称 Description	数量 Qty	备注 Remark
1	CDS-15101	电机板 MOTOR PLATE	1	
2	CDS-15102	皮带轮 PULLEY	1	电磁离合器用 used for electromagnetic clutch machine
	CDS-15103	皮带轮 PULLEY	1	机械离合器用 used for mechanical clutch machine
3	CDS-15701	皮带罩门 DOOR	1	CDS6$\frac{1}{2}$40A/B/C
	CDS-15702	皮带罩门 DOOR	1	CDS6$\frac{1}{2}$50A/B/C
	CDS-15703	皮带罩门 DOOR	1	CDS6$\frac{1}{2}$56B/C
	CDS-15704	皮带罩门 DOOR	1	CDS6$\frac{1}{2}$66A/B/C
	CDS-15705	皮带罩门 DOOR	1	CDS6$\frac{1}{2}$76B/C
4	CDS-15706	皮带罩门框 DOOR FRAME	1	CDS6$\frac{1}{2}$40A/B/C
	CDS-15707	皮带罩门框 DOOR FRAME	1	CDS6$\frac{1}{2}$50A/B/C
	CDS-15708	皮带罩门框 DOOR FRAME	1	CDS6$\frac{1}{2}$56B/C
	CDS-15709	皮带罩门框 DOOR FRAME	1	CDS6$\frac{1}{2}$66A/B/C
	CDS-15710	皮带罩门框 DOOR FRAME	1	CDS6$\frac{1}{2}$76B/C
5	CDS-15711	主轴护罩 SPINDLE COVER	1	CDS****A
	CDS-15712	主轴护罩 SPINDLE COVER	1	CDS****B
	CDS-15713	主轴护罩 SPINDLE COVER	1	CDS****C
6	CDS-51705	油管 PIPE	1	CDS6$\frac{1}{2}$40A/B/C
	CDS-51706	油管 PIPE	1	CDS6$\frac{1}{2}$50A/B/C
	CDS-51707	油管 PIPE	1	CDS6$\frac{1}{2}$56B/C
	CDS-51708	油管 PIPE	1	CDS6$\frac{1}{2}$66A/B/C
	CDS-51709	油管 PIPE	1	CDS6$\frac{1}{2}$76B/C
7	CDS-16109	皮带轮 PULLEY	1	特殊带轮 option
	CDS-16110	刹车轮 BRAKE DISC	1	特殊带轮 option
	M8X35-GB70	螺钉 SCREW	4	
	B 8X45-GB120	销 PIN	2	
	CDS-16120	皮带轮 PULLEY	1	CDS6$\frac{1}{2}$40A / 60Hz

电机装置及油箱 MOTOR AND TANK ASSEMPLY

序号 Item	零件编号 Part Number	零件名称 Description	数量 Qty	序号 Item	零件编号 Part Number	零件名称 Description	数量 Qty
8	CDS-15717	轴 SHAFT	1	36	80-DB1802	油标 OIL LEVEL	1
9	CDS-00318	润滑标牌 LUB CHART N/P	1	37	Z 1/2-G38-3A	油塞 OIL PLUG	1
10	M10X40-GB5782	螺栓 BOLT	4	38	G14-GB3735	螺母 NUT	1
11	10-GB97.1	垫 LUB CHART	4	39	14-GB3764	套 SLEEVE	1
12	M8-GB6170	螺母 NUT	1	40	10-GB308	钢球 BALL	1
13	M8X25-GB75	螺钉 SCREW	1	41	JGC-4-8	净化滤油器 OIL FILLER	1
14	30-GB885	挡圈 CIRCLIP	1	42	A3X20-GB119	销 PIN	1
15	B 35-GB891	挡圈 CIRCLIP	1	43	G8-GB3749.1	管接头 ADAPTOR	1
16	M6X20-GB68	螺钉 SCREW	1	44	CDS-15715	螺栓 BOLT	1
17	M8X12-GB71	螺钉 SCREW	1	45	CDS-15716	销轴 PIN	1
18	M8X25-GB77	螺钉 SCREW	1				
19	14-GB894.1	挡圈 CIRCLIP	1				
20	16-GB97.1	垫 WASHER	2				
21	M16-GB6170	螺母 NUT	2				
22		皮带 V BELT "B"	4				
23	Y132M-4TH B3/7.5KW	电机 MOTOR	1				
24	MS919-L	门锁 LOCK	2				
25	M6_Zn-GB889	锁紧螺母 NUT	4				
26	6X80-Q72-5	铰链轴 GEMEL	2				
27	M6X12-GB70	螺钉 SCREW	9				
28	6-GB96	垫圈 WASHER	5				
29	CDS-51701	箱盖 COVER	1				
30	CDS-51702	油箱 OIL TANK	1				
31	CDS-51703	盖 COVER	1				
32	CDS-51704	盖 COVER	1				
34	CDS-51710	吸油管 PIPE	1				
35	CDS-51711	接头 ADAPTOR	1				

脚踏制动 FOOT BRAKE

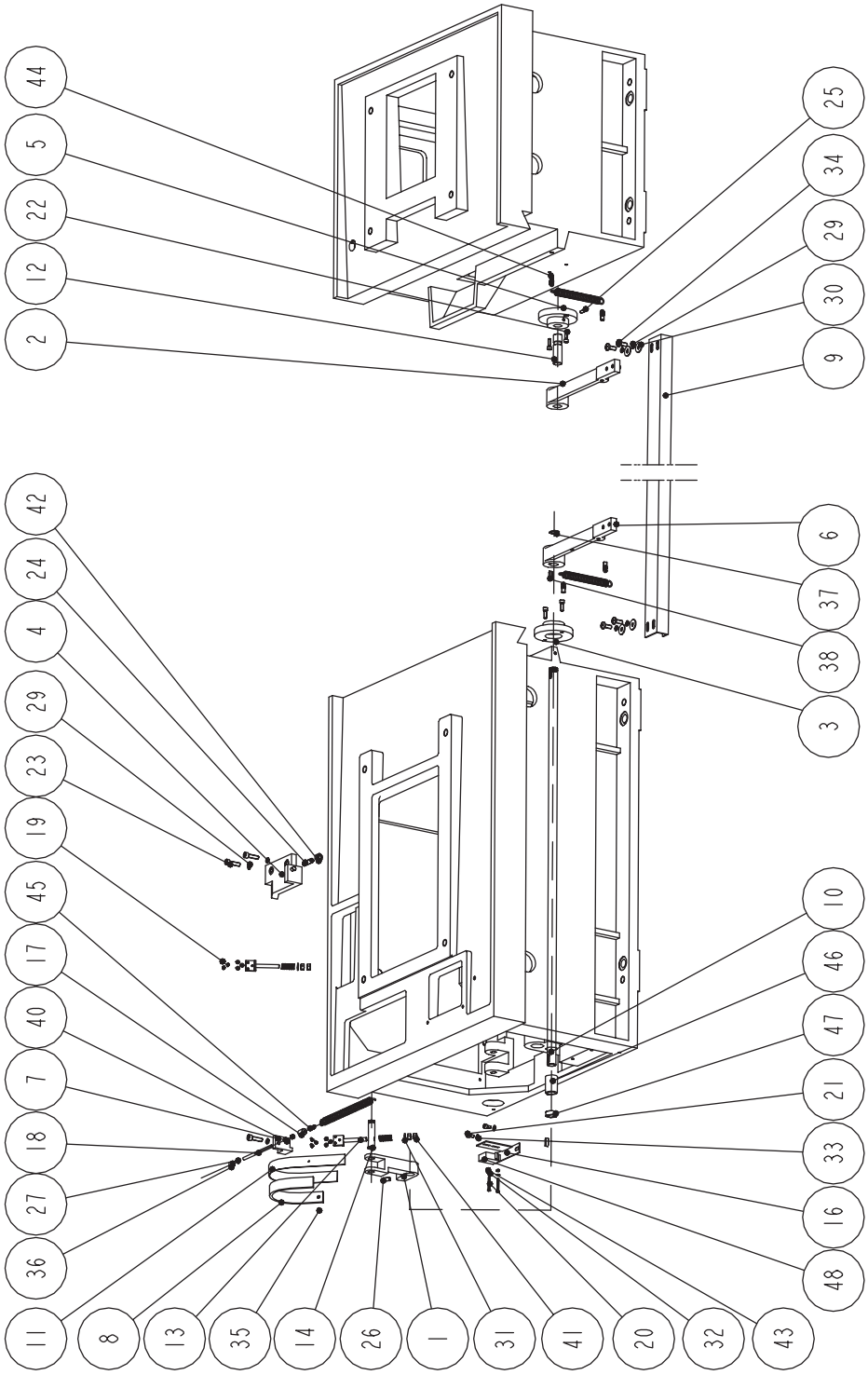

脚踏制动 FOOT BRAKE

序号 Item	零件编号 Part Number	零件名称 Description	数量 Qty	序号 Item	零件编号 Part Number	零件名称 Description	数量 Qty
1	CDS-16102	拨叉 Swing-lever	1	24	M10X40; GB77	螺钉 Screw	1
2	CDS-16103	支架 Bracket	1	25	M6X20; GB77	螺钉 Screw	1
3	CDS-16104	法兰盘 Flange	1	26	M8X16; GB77	螺钉 Screw	1
4	CDS-16105	支架 Bracket	1	27	6; GB93	垫圈 Washer	1
5	CDS-16106	法兰盘 Flange	1	29	8; GB93	垫圈 Washer	7
6	CDS-16107	支架 Bracket	1	30	8-Zn; GB96	垫圈 Washer	4
7	CDS-16108	支架 Bracket	1	31	8; GB97.1	垫圈 Washer	2
8	CDS-16501	刹车带 Braker	1	32	4-Zn; GB97.1	垫圈 Washer	8
	CDS-16502	刹车带 Braker	1	33	6-Zn; GB97.1	垫圈 Washer	2
9	CDS-16701	脚踏板 Footplate	1	34	M8X20; GB818	螺钉 Screw	4
10	CDS-16702	刹车杠 Shaft	1	35	3X8-T3; GB867	铆钉 Rivet	8
11	CDS-16703	刹车钢带 Braker-fixing	1	36	M6-Zn; GB889	螺母 Nut	1
	CDS-16713	刹车钢带 Braker-fixing	1	37	20; GB894.1	挡圈 Circlip	1
12	CDS-16704	小轴 Shaft	1	38	6X20; GB71096	键 Key	2
13	CDS-16705	拉杆 Connect-rod	2	39	1X12X60; GB2089	弹簧 Spring	2
14	CDS-16706	小轴 Pin	1	40	M6; GB6170	螺母 Nut	2
15	CDS-16709	弹簧 Spring	3	41	M8; GB6170	螺母 Nut	4
16	CDS-16710	开关板 Fixing Plate	1	42	M10; GB6170	螺母 Nut	1
17	CDS-16711	螺母 Nut	1	43	M4-Zn; GB6170	螺母 Nut	2
18	CDS-16712	螺杆 Bolt	1	44	M8; J29-4	螺钉 Screw	4
19	M4X10; GB65	螺钉 Screw	6	45	M6; J29-4	螺钉 Screw	1
20	M4X30-Zn; GB65	螺钉 Screw	2	46	B28n6X40; Q41-1	轴套 Bush	1
21	M6X12; GB70	螺钉 Screw	2	47	20X10; Q43-1	隔套 Space	1
22	M6X20; GB70	螺钉 Screw	4	48	LXW5-11G2/F	行程开关 Switch	1
23	M8X30; GB70	螺钉 Screw	3				

床头箱 HEADSTOCK Ⅰ轴——机械离合器 Ⅰshaft---mechanical clutch

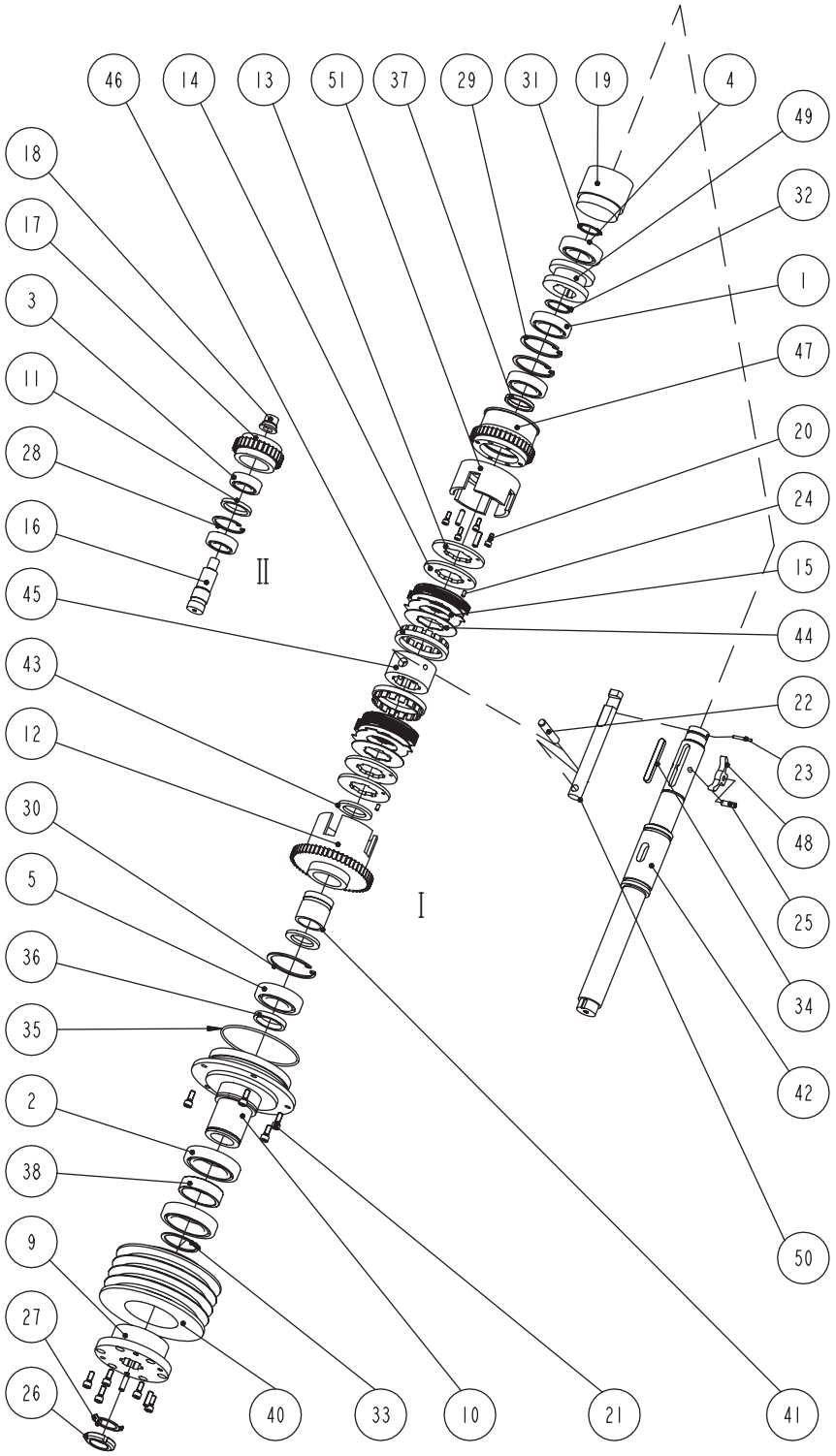

床头箱 HEADSTOCK Ⅰ轴--机械离合器 Ⅰshaft---mechanical clutch

序号 Item	零件编号 Part Number	零件名称 Description	数量 Qty	序号 Item	零件编号 Part Number	零件名称 Description	数量 Qty
1	40X68X15;6008	轴承 Bearing	2	31	35 ;GB894.1	挡圈 Circlip	1
2	60X95X18;6012	轴承 Bearing	2	32	40 ;GB894.1	挡圈 Circlip	1
3	25X52X15;6205	轴承 Bearing	2	33	60 ;GB894.1	挡圈 Circlip	1
4	35X72X17;6207	轴承 Bearing	1	34	10X80;GB1096	键 Key	1
5	40X80X18;6208	轴承 Bearing	1	35	132X3.55;GB3452.1	密封圈 Gasket Ring	1
9	CDS-20110	传动套 Transmission Sleeve	1	36	40X55X8;GB9877.1	密封圈 Gasket Ring	1
10	CDS-20112	卸荷套 Loading Sleeve	1	37	40X1;Q43-1	隔套 Spacer	1
11	CDS-20114	隔套 Spacer	1	38	60X20;Q43-1	隔套 Spacer	1
12	CDS-20746	结合子齿轮 Gear-clutch 55T	1				
13	CDS-20748	固定片 Locating Piece	2	40	CDS-20111	皮带轮(出口50Hz)Pulley	1
14	CDS-20749	固定片 Locating Piece	2		CDS-20137	皮带轮(国内低速) Pulley	1
15	CDS-20750	外摩擦片 Outer Friction Piece	14	41	CDS-20304	轴套 Bush	1
16	CDS-20754	Ⅱ轴 Shaft	1	42	CDS-20744	Ⅰ轴 Shaft	1
17	CDS-20755	齿 轮 Gear 32T	1	43	CDS-20745	垫 Spacer	2
18	CDS-20790	套 Sleeve	1	44	CDS-20751	内摩擦片 Inner Friction Piece	16
19	DBB-3	油泵 Pump	1	45	CDS-20752	调整座 Adjust Sleeve	1
20	M6X16;GB70	螺钉 Screw	4	46	CDS-20753	调整圈 Adjust Ring	2
21	M8X20;GB70	螺钉 Screw	11	47	CDS-20757	结合子齿轮 Gear 42T	1
22	A 12X70;GB119	销 Pin	1	48	CDS-20758	元宝拔座 Key	1
23	A 4X35;GB119	销 Pin	1	49	CDS-20759	推动套 Shift Sleeve	1
24	A 5X10;GB119	销 Pln	2	50	CDS-20760	拉杆 Connect-rod	1
25	B 8X26;GB120	销 Pin	5	51	CDS-20772	结合子 Clutch	1
26	M33X1.5;GB812	螺母 Nut	1				
27	33 ;GB858	垫圈 Washer	1				
28	52 ;GB893.1	挡圈 Circlip	1				
29	68 ;GB893.1	挡圈 Circlip	2				
30	80 ;GB893.1	挡圈 Circlip	1				

床头箱 HEADSTOCK Ⅰ轴——电磁离合器 Ⅰ shaft---electromagnetic cluth

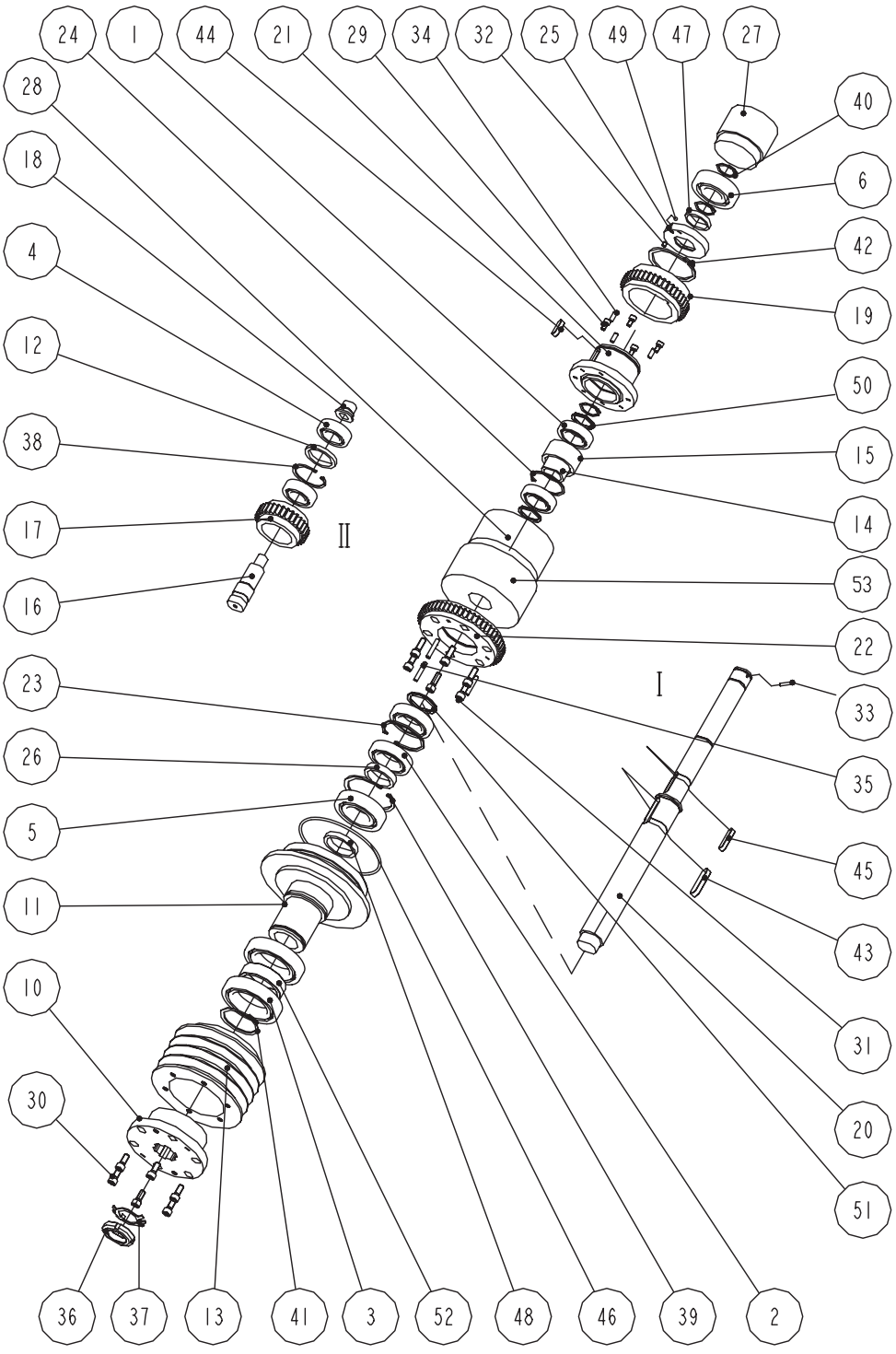

床头箱 HEADSTOCK Ⅰ轴--电磁离合器 Ⅰ shaft---electromagnetic cluth

序号 Item	零件编号 Part Number	零件名称 Description	数量 Qty	序号 Item	零件编号 Part Number	零件名称 Description	数量 Qty
1	35X55X13;6006	轴承 Bearing	2	31	M8X25;GB70	螺钉 Screw	6
2	40X68X15;6008	轴承 Bearing	2	32	M6X8;GB78	螺钉 Screw	1
3	60X95X18;6012	轴承 Bearing	2	33	A 4X28;GB119	销 Pin	1
4	25X52X15;6205	轴承 Bearing	2	34	A 6X16;GB119	销 Pin	3
5	40X80X18;6208	轴承 Bearing	1	35	A 6X35;GB119	销 Pin	3
6	30X72X19;6306	轴承 Bearing	1	36	M33X1.5;GB812	螺母 Nut	1
10	CDS-20110	传动套 Transmission Sleeve	1	37	33;GB858	垫圈 Washer	1
11	CDS-20112	卸荷套 Loading Sleeve	1	38	52 ;GB893.1	垫圈 Washer	1
12	CDS-20114	隔套 Spacer	1	39	80;GB893.1	挡圈 Circlip	1
13	CDS-20202	皮带轮 Pulley	1	40	30;GB894.1	挡圈 Circlip	3
14	CDS-20213	套 Spacer	1	41	60;GB894.1	挡圈 Circlip	1
15	CDS-20214	套 Spacer	1	42	75;GB894.1	挡圈 Circlip	1
16	CDS-20754	Ⅱ轴 Shaft	1	43	12X50;GB1096	键 Key	1
17	CDS-20755	齿轮 Gear 32T	1	44	8X28;GB1096	键 Key	1
18	CDS-20790	套 Sleeve	1	45	8X40;GB1096	键 Key	1
19	CDS-20864	齿轮 Gear 42T	1	46	132X3.55;GB3452.1	密封圈 Gasket Ring	1
20	CDS-20870	Ⅰ轴 Shaft	1	47	30X42X7;GB9877.1	密封圈 Gasket Ring	1
21	CDS-20871	法兰盘 Flange	1	48	40X55X8;GB9877.1	密封圈 Gasket Ring	1
22	CDS-20873	齿轮 Gear 55T	1	49	5;GB308	钢球 Ball	1
23	CDS-20874	孔用挡圈 circlip	1	50	30X3;Q43-1	隔套 Spacer	2
24	CDS-20878	孔用挡圈 Circlip	1	51	40X3;Q43-1	隔套 Spacer	1
25	CDS-20879	挡油环 Sleeve	1	52	60X20;Q43-1	隔套 Spacer	1
26	CDS-20880	套 Spacer	1	53	DLM9-10	电磁离合器 Electromagnetic Clutch	1
27	DBB-3	油泵 Pump	1				
28	DLM9-5	电磁离合器 Electromagnetic Clutch	1				
29	M6X12;GB70	螺钉 Screw	4				
30	M8X20;GB70	螺钉 Screw	6				

床头箱 HEADSTOCK Ⅲ~Ⅵ 轴 Ⅲ to Ⅵ shafts

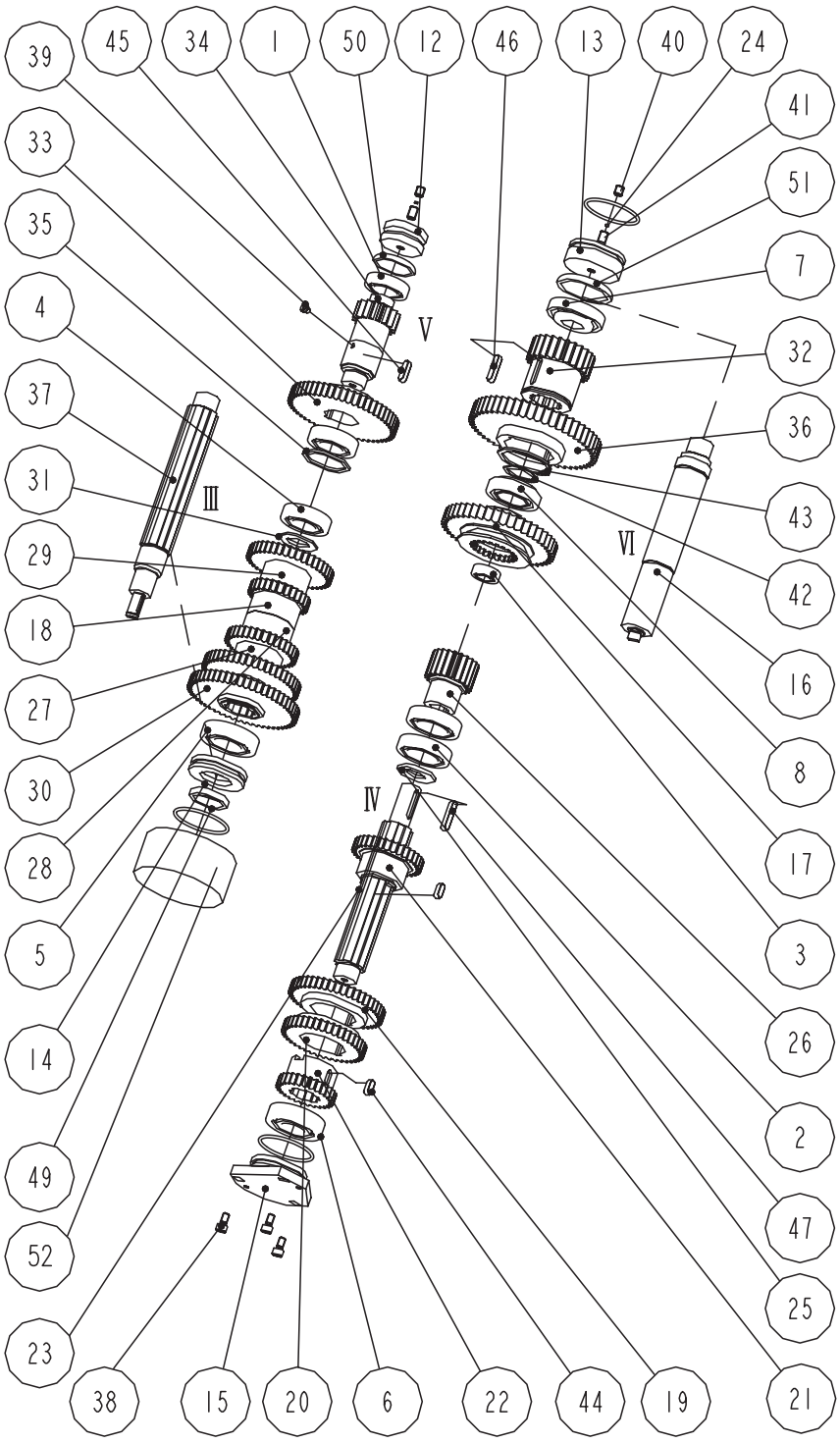

床头箱 HEADSTOCK Ⅲ~Ⅵ 轴 Ⅲ to Ⅵ shafts

序号 Item	零件编号 Part Number	零件名称 Description	数量 Qty	序号 Item	零件编号 Part Number	零件名称 Description	数量 Qty
1	30X55X13;6006	轴承 Bearing	1	32	CDS-20756	齿轮 Gear 25T 52mm bore	1
2	40X68X15;6008	轴承 Bearing	2		CDS-A20756	齿轮 Gear 17T 82/105mm bore	1
3	15X35X11;6202	轴承 Bearing	1	33	CDS-20762	齿轮 Gear 54T	1
4	30X62X16;6206	轴承 Bearing	2	34	CDS-20763	Ⅴ轴 Shaft	1
5	35X72X17;6207	轴承 Bearing	1	35	CDS-20791	隔套 Spacer	1
6	30X72X19;6306	轴承 Bearing	1	36	CDS-20764	齿轮 Gear 57T	1
7	30X72X19;31306	轴承 Bearing	1		CDS-20867	齿轮 Gear 53T	1
8	40X68X19;32008	轴承 Bearing	1		CDS-20868	齿轮 Gear 49T	1
12	CDS-20116	堵 Plug	1		CDS-A20764	齿轮 Gear 50T	1
13	CDS-20117	堵 Plug	1		CDS-A20864	齿轮 Gear 46T	1
14	CDS-20215	挡垫 Sleeve	1		CDS-B20864	齿轮 Gear 43T	1
15	CDS-20216	法兰盘 Flange	1	37	CDS-20741	Ⅲ轴 Shaft (M.C.)	1
16	CDS-20711	Ⅵ轴 Shaft	1		CDS-20872	Ⅲ轴 Shaft (E-MC)	1
17	CDS-20726	齿轮 Gear 46T	1	38	M8X16;GB70	螺钉 Screw	3
18	CDS-20727	齿轮 Gear 29T	1	39	M8X12;GB72	螺钉 Screw	1
19	CDS-20729	齿轮 Gear 47T	1	40	M8X12;GB77	螺钉 Screw	2
20	CDS-20730	齿轮 Gear 41T	1	41	M8X16;GB77	螺钉 Screw	2
21	CDS-20731	齿轮 Gear 34T	1	42	40 ;GB894.1	挡圈 Circlip	1
22	CDS-20732	齿轮 Gear 28T	1	43	65 ;GB894.1	挡圈 Circlip	1
23	CDS-20734	Ⅳ轴 Shaft	1	44	8X20 ;GB1096	键 Key	2
24	CDS-20735	垫 Washer	2	45	8X28 ;GB1096	键 Key	1
25	CDS-20736	垫 Spacer	1	46	8X36 ;GB1096	键 Key	2
26	CDS-20737	齿轮 Gear 22T	1	47	8X40 ;GB1096	键 Key	1
27	CDS-20738	齿轮 Gear 48T	1	48	65X3.55 ;GB3452.1	密封圈 Gasket Ring	3
28	CDS-20739	齿轮 Gear 35T	1	49	35X50X8 ;GB9877.1	密封圈 Gasket Ring	1
29	CDS-20740	齿轮 Gear 42T	1	50	55 ;Q55-8	顶盘 Locating Piece	1
30	CDS-20742	齿轮 Gear 55T	1	51	72 ;Q55-8	顶盘 Locating Piece	1
31	CDS-20743	垫 Spacer	1	52	DHD11-30	电磁刹车 Electromagnetic Brake	1

Note: For item 36, 49T used for electromagnetic cluth (E-MC) machine 60Hz with 52mm spindle bore, 53T for E-MC machine 50Hz 52mm bore, 57T for mechanical cluth machine(M.C) 52mm bore.50T for E-MC cluth with 50Hz 82mm bore and M.C machine 82mm bore.46T for M.C machine 105mm bore and E-MC cluth with 60Hz 82mm bore .43T for E-MC cluth with 60Hz 105mm bore .

床头箱 HEADSTOCK 主轴—52mm孔 Spindle of 52mm bore

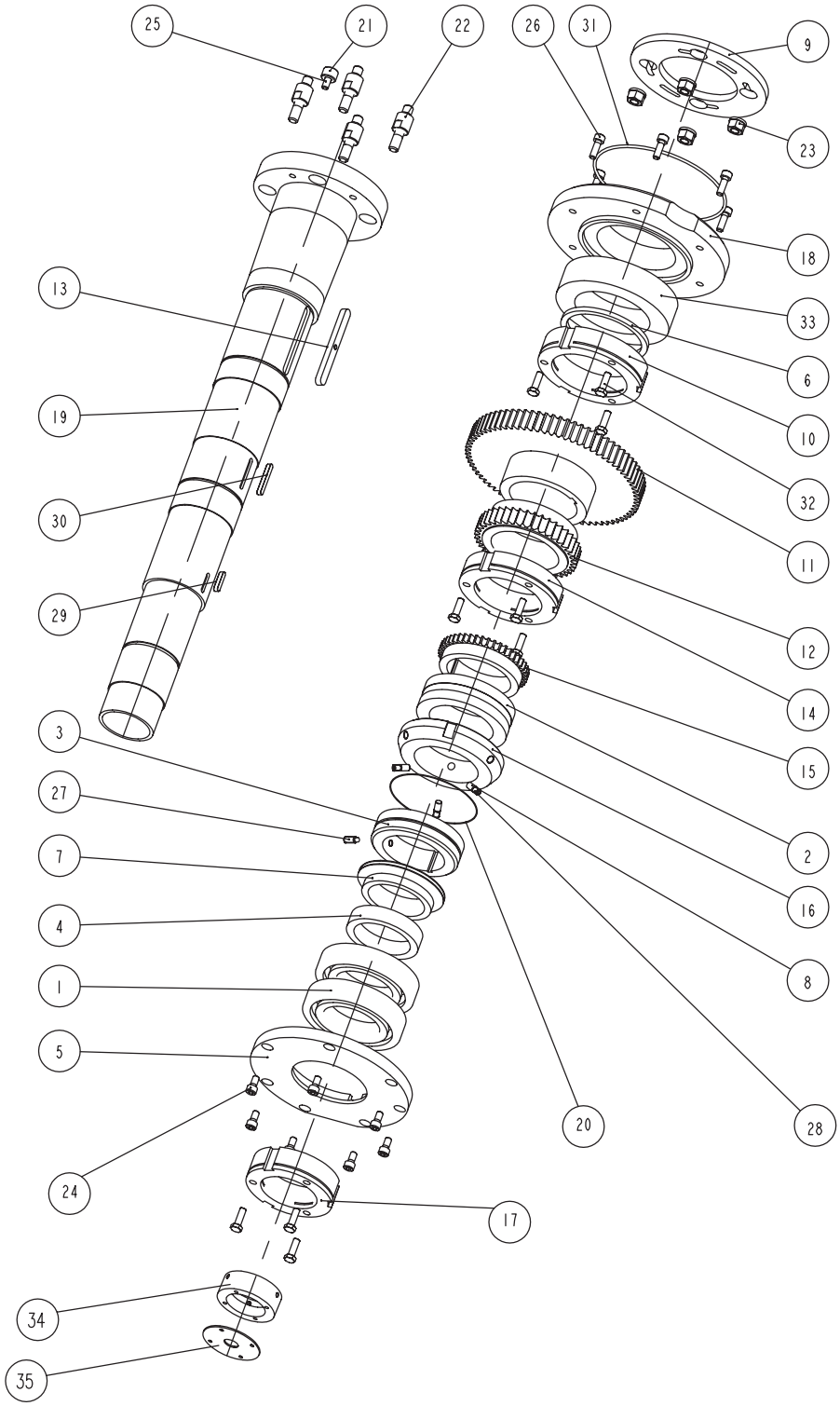

床头箱 HEADSTOCK 主轴—52mm孔 Spindle of 52mm bore

序号 Item	零件编号 Part Number	零件名称 Description	数量 Qty	序号 Item	零件编号 Part Number	零件名称 Description	数量 Qty
1	75X130X25;7215AC	轴承 Bearing	2	20	ø1X400	铁丝 Iron—wire	1
2	CDS—20102	阻尼环 Ring	1	21	6 ;DB1451	键 Key	1
3	CDS—20106	平衡环 Ring	1	22	6 ;DB1452	螺栓 Bolt	4
4	CDS—20107	套 Spacer	1	23	6 ;DB1453	螺母 Nut	4
5	CDS—20108	后法兰盖 Flange	1	24	M8X16;GB70	螺钉 Screw	7
6	CDS—20118	隔套 Spacer	1	25	M8X20;GB70	螺钉 Screw	1
7	CDS—20121	隔套 Spacer	1	26	M8X25;GB70	螺钉 Screw	6
8	CDS—20302	垫 Pin	3	27	M8X20;GB75	螺钉 Screw	1
9	CDS—20702	卡口垫 Plate	1	28	M8X10;GB77	螺母 Nut	3
10	CDS—20703	螺母 Nut	1	29	6X28;GB1096	键 Key	1
11	CDS—20704	大齿轮 Gear 75T	1	30	6X45;GB1096	键 Key	1
12	CDS—20705	齿轮 Gear 42T	1	31	170X3.55;GB3452.1	密封圈 Gasket Ring	1
	CDS—20867	齿轮 Gear 53T	1	32	M8X25;GB5783	螺母 Bolt	9
	CDS—20868	齿轮 Gear 49T	1	33	100X150X37;NN3020K/SP W33	轴承 Bearing	1
13	CDS—20706	键 Key	1	34	CDS—20805	套 Sleeve 特殊订货 Option	1
14	CDS—20707	螺母 Nut	1	35	CDS—20806	盖 Cover 特殊订货 Option	1
15	CDS—20715	齿轮 Gear 45T	1				
16	CDS—20716	螺母 Nut	1				
17	CDS—20728	螺母 Nut	1				
18	CDS—20105—C6	前法兰盘 Flange	1				
	CDS—20105—D6	前法兰盘 Flange	1				
19	CDS—20701—A6	主轴 A6 Spindle	1				
	CDS—20701—C6	主轴 C6 Spindle	1				
	CDS—20701—D6	主轴 D6 Spindle	1				

Note: For item 12, 42T used for mechanical clutch machine, 53T for electromagnetic clutch (E—MC) 50Hz machine,and 49T for E—MC machine 60Hz.

床头箱 HEADSTOCK 105mm孔主轴 SPINDLE---105mm bore

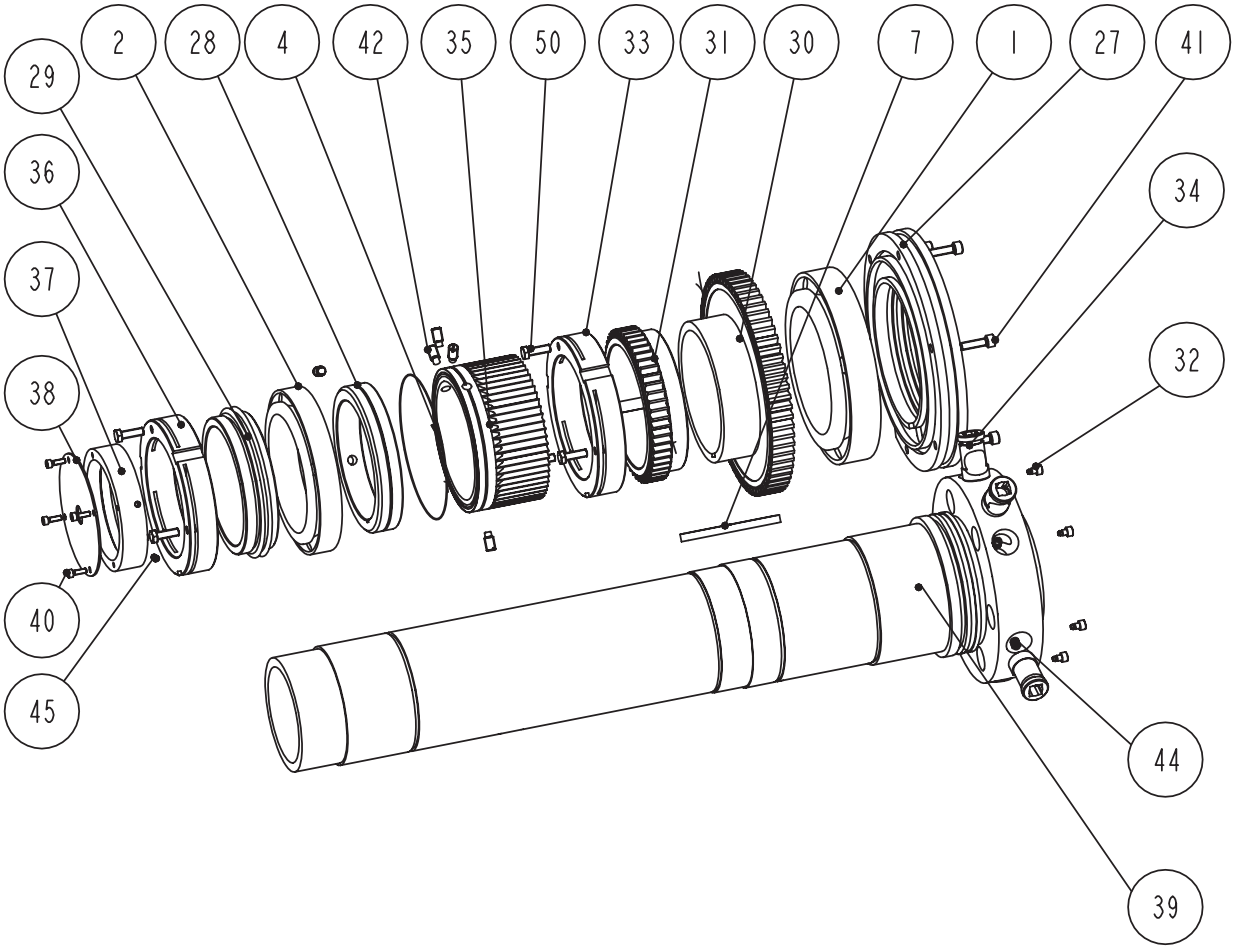

床头箱 HEADSTOCK 105mm孔主轴 SPINDLE---105mm bore

序号 Item	零件编号 Part Number	零件名称 Description	数量 Qty	备注 Remark
1	32028	轴承 Bearing	1	
2	32926	轴承 Bearing	1	
4	ø1X550	铁丝 Iron-wire	2	
7	CDS-20706	键 Key	2	
27	CDS-B20105	前法兰盘 Flange	1	
28	CDS-B20106	平衡环 Ring	1	
29	CDS-B20121	套 Spacer	1	
30	CDS-B20704	大齿轮 Gear 68T	1	
31	CDS-B20705	齿轮 Gear 54T	1	for mechanical clutch machine, and electro-magnetic clutch (E-MC) 50Hz machine.
	CDS-B20865	齿轮 Gear 57T	1	for E-MC machine 60Hz.
32	CDS-B20706A	螺钉 Screw	6	
33	CDS-B20707	螺母 Nut	1	
34	CDS-B20708A	锁紧凸轮 Plunger	6	
35	CDS-B20715	齿轮 Gear 60T	1	
36	CDS-B20728	螺母 Nut	1	
37	CDS-B20803	套 Sleeve	1	特殊订货 Option
38	CDS-B20804	垫 Washer	1	特殊订货 Option
39	CDS-B20701A-D8	D8-主轴 Spindle	1	
40	M5X16;GB70	螺钉 Screw	8	
41	M8X30;GB70	螺钉 Screw	12	
42	M10X20;GB75	螺钉 Screw	5	
44	M8X10;GB77	螺钉 Screw	3	
45	M6X8;GB78	螺钉 Screw	6	
50	M8X25;GB5783	螺栓 Bolt	12	

床头箱 HEADSTOCK 82mm孔主轴 SPINDLE---82mm bore

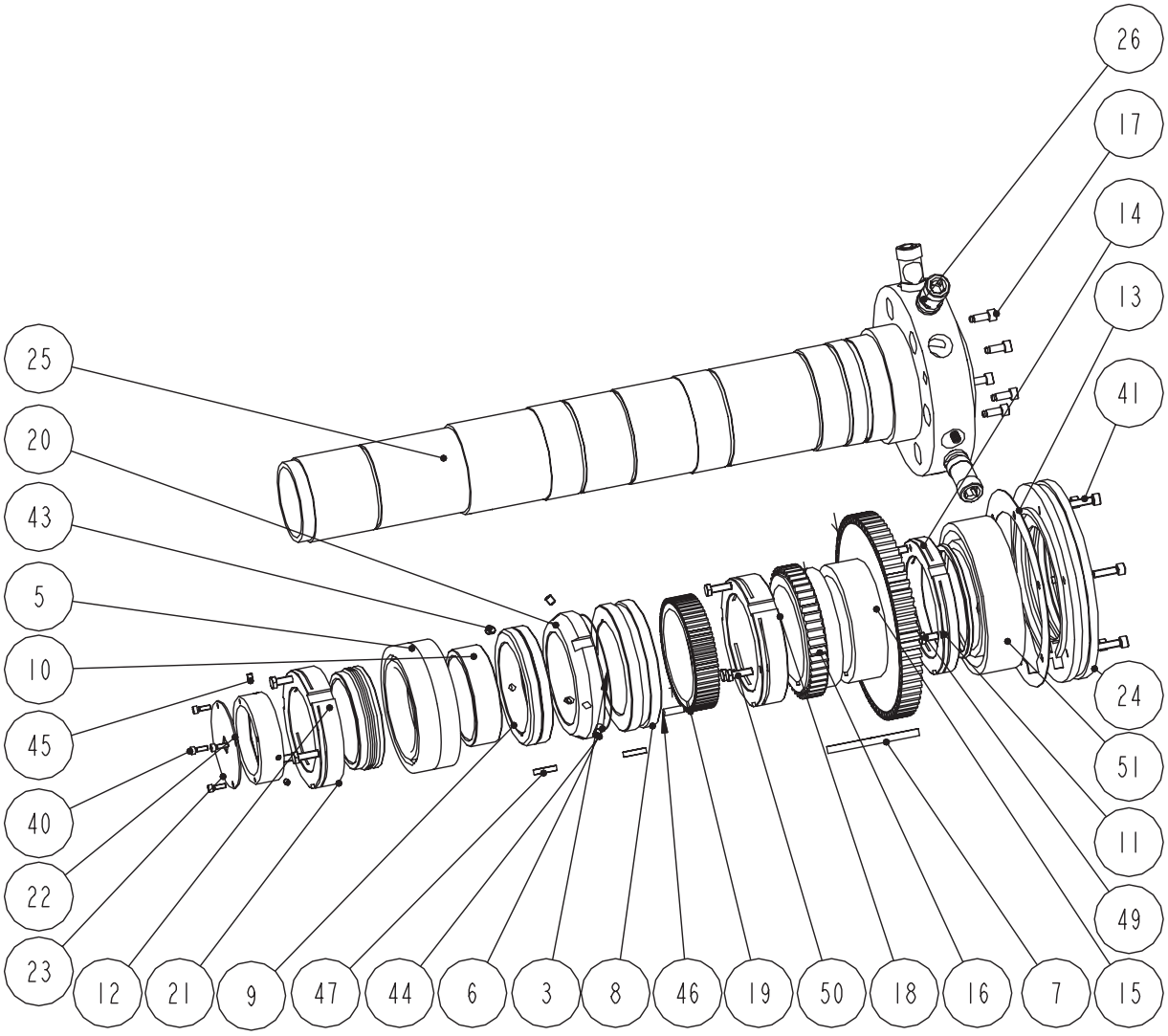

床头箱 HEADSTOCK 82mm孔主轴 SPINDLE---82mm bore

序号 Item	零件编号 Part Number	零件名称 Description	数量 Qty	备注 Remark
3	ø1X500	铁丝 Iron-wire	1	
5	7020AC TA/P5 DBC	轴承 Bearing	1	
6	CDS-20302	垫 Pin	3	
8	CDS-A20102	阻尼环 Ring	1	
9	CDS-A20106	平衡环 Ring	1	
10	CDS-A20107	套 Spacer	1	
11	CDS-A20118	隔套 Spacer	1	
12	CDS-A20121	隔套 Spacer	1	
13	CDS-A20504	纸垫 Washer	1	
14	CDS-A20703	螺母 Nut	1	
15	CDS-A20704	大齿轮 Gear 68T	1	
16	CDS-A20705	齿轮 Gear 50T	1	for mechanical clutch machine, and electro-magnetic clutch (E-MC) 50Hz machine.
	CDS-A20864	齿轮 Gear 46T	1	for E-MC machine 60Hz.
17	CDS-A20706	螺钉 Screw	6	
18	CDS-A20707	螺母 Nut	1	
19	CDS-A20715	齿轮 Gear 66T	1	
20	CDS-A20716	螺母 Nut	1	
21	CDS-A20728	螺母 Nut	1	
22	CDS-A20803	套 Sleeve	1	特殊订货 Option
23	CDS-A20804	垫 Washer	1	特殊订货 Option
24	CDS-A20105-D8	前法兰盘 Flange	1	
25	CDS-A20701-D8	D8-主轴 Spindle	1	
26	CDS-A20708-D8	锁紧凸轮 Plunger	6	
40	M5X16; GB70	螺钉 Screw	8	
43	M8X20; GB75	螺钉 Screw	1	
45	M6X8; GB78	螺钉 Screw	6	
46	A 8X26; GB119	销 Pin	1	
47	6X28; GB1096	键 Key	2	
48	1.2X8X25; GB2089	弹簧 Spring	12	
49	M8X16; GB5783	螺栓 Bolt	3	
50	M8X25; GB5783	螺栓 Bolt	12	
51	NN3024K P5W33	轴承 Bearing	1	

床头箱 HEADSTOCK Ⅷ~Ⅺ 轴 Ⅷ to Ⅺ shafts

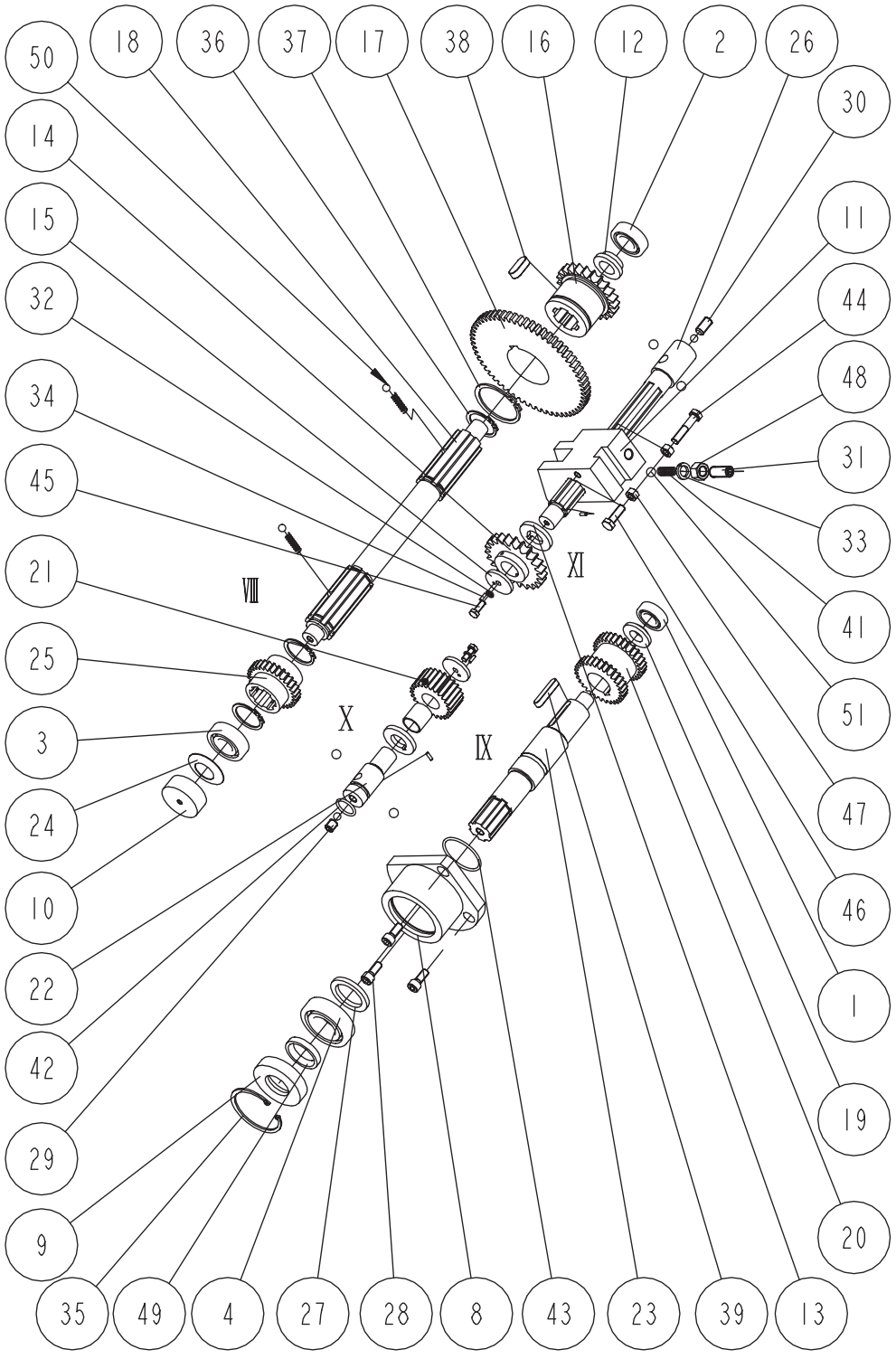

床头箱 HEADSTOCK Ⅷ~Ⅺ 轴 Ⅷ to Ⅺ shafts

序号 Item	零件编号 Part Number	零件名称 Description	数量 Qty	序号 Item	零件编号 Part Number	零件名称 Description	数量 Qty
1	17X35X10;6003	轴承 Bearing	1	32	6 ;GB93	垫圈 Washer	2
2	20X42X12;6004	轴承 Bearing	1	33	12 ;GB93	垫圈 Washer	1
3	20X47X14;6204	轴承 Bearing	1	34	A 3X10;GB119	销 Pin	4
4	30X62X16;6206	轴承 Bearing	1	35	62;GB893.1	挡圈 Circlip	1
8	CDS-20103	法兰套 Flange	1	36	35 ;GB894.1	挡圈 Circlip	3
9	CDS-20104	套 Sleeve	1	37	55 ;GB894.1	挡圈 Circlip	1
10	CDS-20119	堵 Plug	1	38	12X28;GB1096	键 Key	1
11	CDS-20217	拨叉 Shift	1	39	8X40;GB1096	键 Key	1
12	CDS-20708	垫 Spacer	1	40	0.8X6X25 ;GB2089	弹簧 Spring	2
13	CDS-20709	垫 Spacer	2	41	1.2X8X25 ;GB2089	弹簧 Spring	1
14	CDS-20710	齿轮 Gear 23T	1	42	20X2.65 ;GB3452.1	密封圈 Gasket Ring	1
15	CDS-20712	垫 Washer	2	43	45X2.65 ;GB3452.1	密封圈 Gasket Ring	1
16	CDS-20713	齿轮 Gear 23T	1	44	M8X40 ;GB5782	螺栓 Bolt	1
17	CDS-20714	齿轮 Gear 64T	1	45	M6X16 ;GB5783	螺栓 Bolt	2
18	CDS-20717	Ⅷ轴 Shaft	1	46	M8X25 ;GB5783	螺栓 Bolt	1
19	CDS-20718	垫 Spacer	1	47	M8 ;GB6170	螺母 Nut	2
20	CDS-20719	齿轮 Gear 30T	1	48	M12 ;GB6170	螺母 Nut	1
21	CDS-20720	齿轮 Gear 25T	1	49	30X42X7 ;GB9877.1	密封圈 Gasket Ring	1
22	CDS-20721	Ⅹ轴 Shaft	1	50	8 ;GB308-64	钢球 Ball	4
23	CDS-20722	Ⅸ轴 Shaft	1	51	10 ;GB308-64	钢球 Ball	5
24	CDS-20724	碟形弹簧 Dishing Spring	1				
25	CDS-20725	齿轮 Gear 30T	1				
26	CDS-20733	Ⅺ轴 Shaft	1				
27	35 ;GB51-1	衬圈 Dustproof Ring	1				
28	M8X20;GB70	螺钉 Screw	3				
29	M10X12;GB77	螺钉 Screw	1				
30	M10X20;GB77	螺钉 Screw	1				
31	M12X30;GB77	螺钉 screw	1				

床头箱 HEADSTOCK 操纵轴 Operation shafts

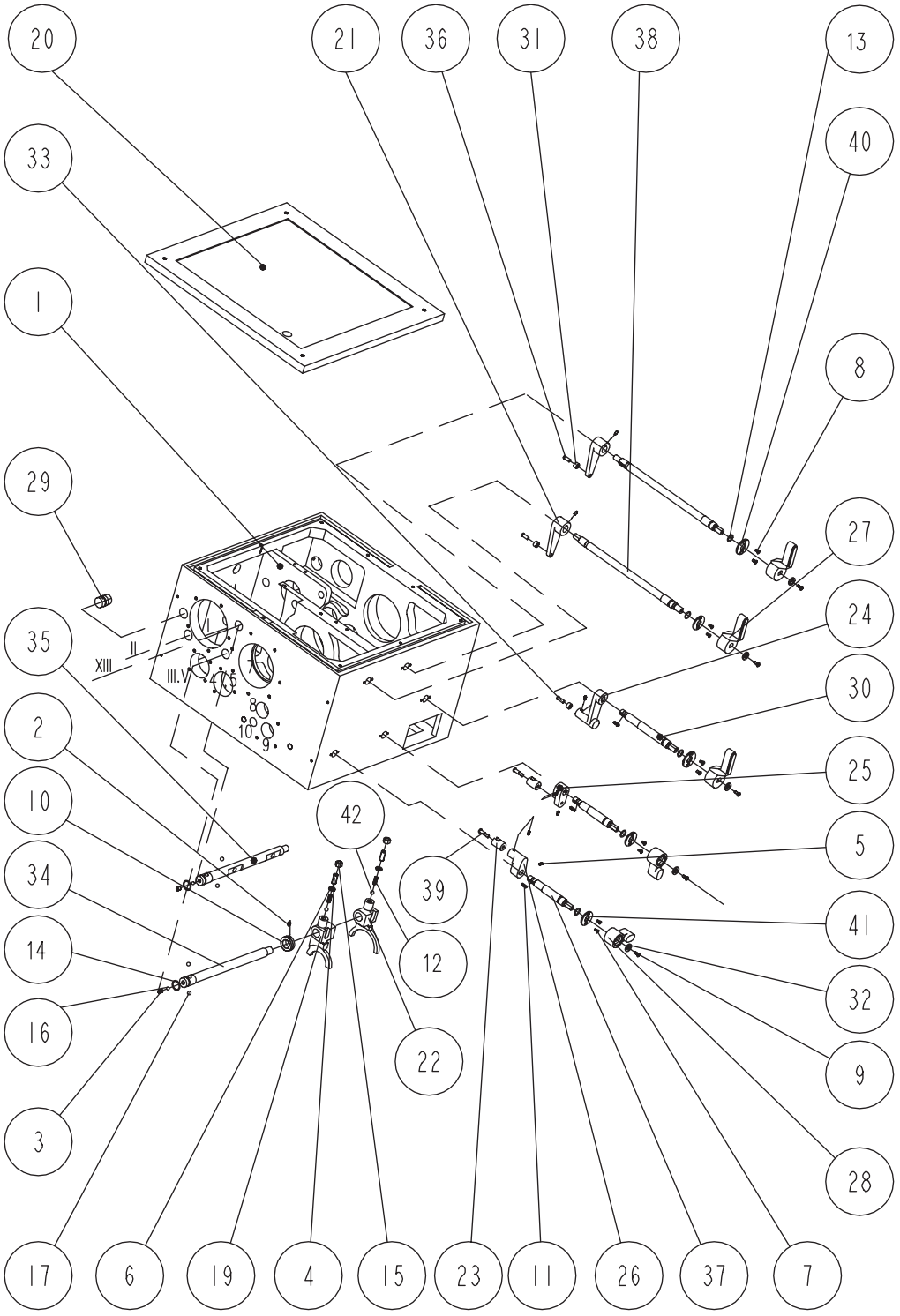

床头箱 HEADSTOCK 操纵轴 Operation shafts

序号 Item	零件编号 Part Number	零件名称 Description	数量 Qty	序号 Item	零件编号 Part Number	零件名称 Description	数量 Qty
1	CDS-20151	箱体 Headstock	1	27	CDS-20306	手柄 Handle	3
2	M8X12;GB72	螺钉 Screw	1	28	CDS-20307	手柄 Handle	2
3	M10X12;GB77	螺钉 Screw	2	29	CDS-20747	接头 Connection	1
4	M12X30;GB77	螺钉 Screw	2	30	CDS-20765	小轴 Shaft	1
5	M6X12;GB79	螺钉 Screw	7	31	CDS-20766	滑块 Shift	3
6	12 ;GB93	垫圈 Washer	2	32	CDS-20769	垫圈 Washer	5
7	M5X12;GB819	螺钉 Screw	6	33	CDS-20770	轴 Shaft	1
8	M6X12;GB819	螺钉 Screw	4	34	CDS-20775	14轴 Shaft	1
9	M6X16;GB820	螺钉 Screw	5	35	CDS-20777	13轴 Shaft	1
10	25 ;GB885	挡圈 Circlip	1	36	CDS-20782	小轴 Shaft	2
11	5X20 ;GB1096	键 Key	5	37	CDS-20784	小轴 Shaft	2
12	1.2X8X25;GB2089	弹簧 Spring	2	38	CDS-20785	操纵轴 Shaft	2
13	17X2.65 GB3452.1	密封圈 Gasket Ring	5	39	CDS-20786	小轴 Shaft	3
14	23.6X2.65 GB3452.1	密封圈 Gasket Ring	2	40	CDS-20787	垫 Bush	3
15	M12 ;GB6170	螺母 Nut	2	41	CDS-20797	垫 Bush	2
16	8 ;GB308	钢球 Ball	2	42	10 ;GB308	钢球 Ball	2
17	12 ;GB308	钢球 Ball	4				
18							
19	CDS-20113	拨叉 Shift	1				
20	CDS-20125	箱盖 Cover	1				
21	CDS-20127	拨叉 Lever	2				
22	CDS-20129	拨叉 Shift	1				
23	CDS-20130	拨叉 Shift	2				
24	CDS-20131	拨叉 Lever	1				
25	CDS-20132	拨叉 Lever	1				
26	CDS-20135	拨叉 Lever	1				

床头箱 HEADSTOCK 制动轴——机械离合器 Brake shaft---mechanical clutch

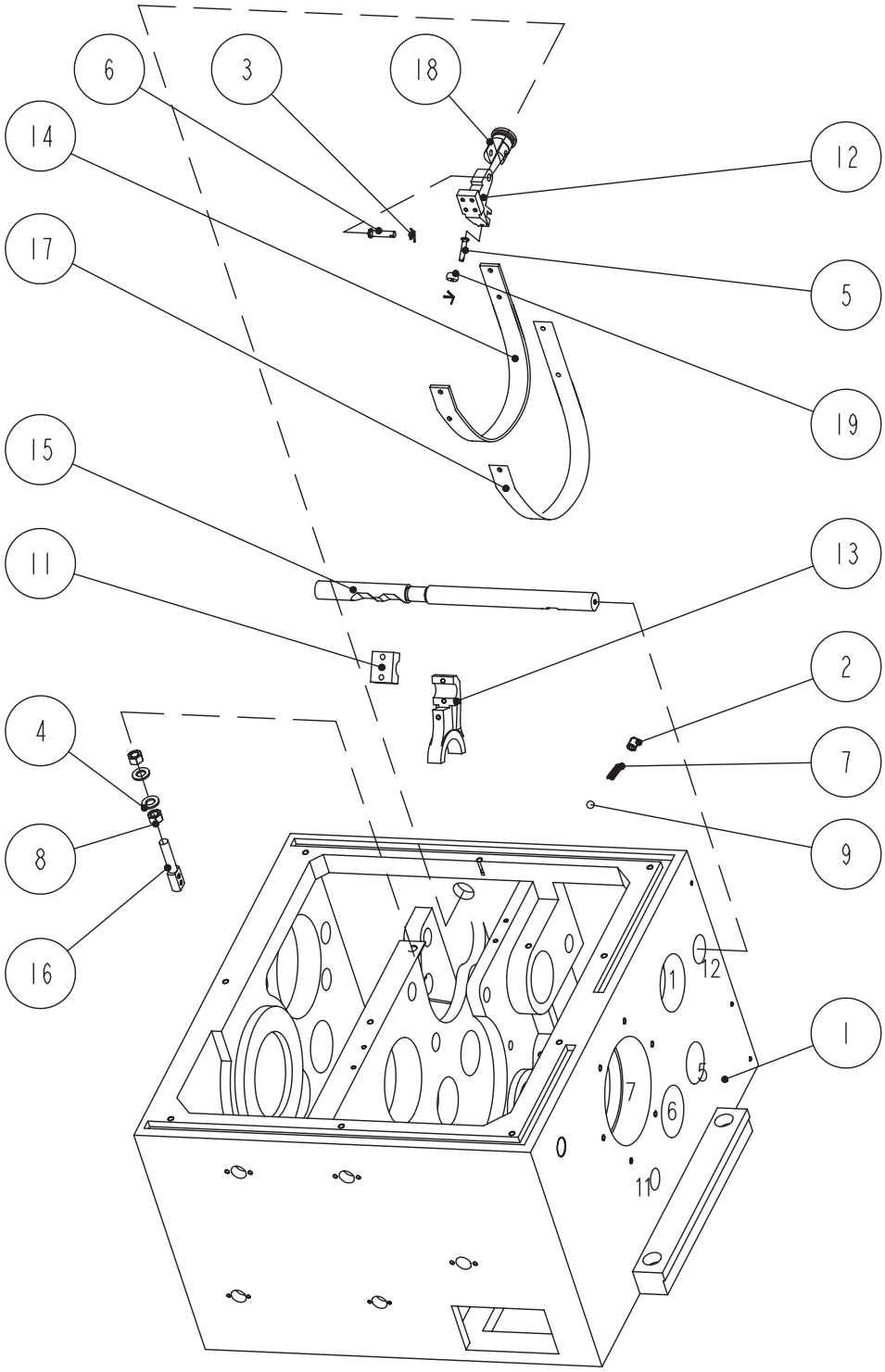

床头箱 HEADSTOCK 制动轴——机械离合器 Brake shaft---mechanical clutch

序号 Item	零件编号 Part Number	零件名称 Description	数量 Qty
1		主轴箱体 HEADSTOCK	1
2	M12X16;GB77	螺钉 SCREW	1
3	2X20;GB91	销 PIN	2
4	12 ;GB97.1	垫圈 WASHER	2
5	B6X30;GB882	销轴 PIN	1
6	B8X35 ;GB882	销轴 PIN	1
7	1.2X8X25;GB2089	弹簧 SPRING	1
8	M12 ;GB6170	螺母 NUT	2
9	10;GB308	钢球 BALL	1
11	CDS-20122	压块 BLOCK	1
12	CDS-20123	拉杆 POD	1
13	CDS-20128	拨叉 Shifter fork	1
14	CDS-20501	制动带 BRAKE STRIP	1
15	CDS-20761	轴 Shaft	1
16	CDS-20767	螺栓 Bolt	1
17	CDS-20768	钢带 Steel-belt	1
18	CDS-20771	支座 Support	1
19	CDS-20792	套 Sleeve	1

溜板箱 Apron

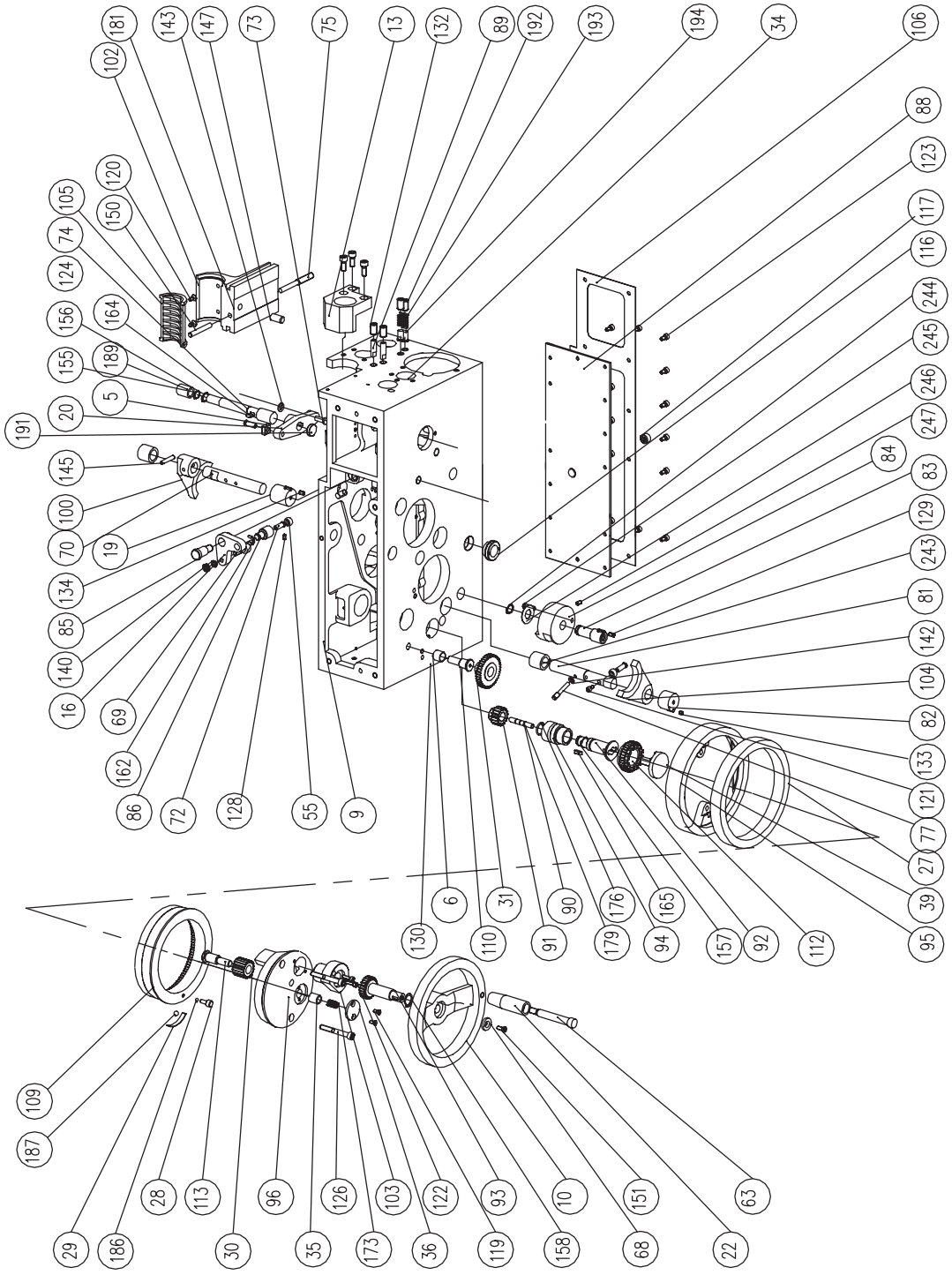
181
143
147
73
75
13
132
89
192
193
194
34
106
102
88
120
123
105
150
117
74
116
124
244
156
164
245
155
189
246
5
247
20
84
191
83
145
129
100
243
70
19
81
134
142
85
104
140
82
16
133
69
121
162
77
27
86
72
128
55
9
39
6
31
90
176
165
95
130
110
91
179
94
157
92
112
109
187
28
113
96
126
103
122
93
10
151
63
29
186
30
35
173
36
119
158
68
22

溜板箱 Apron

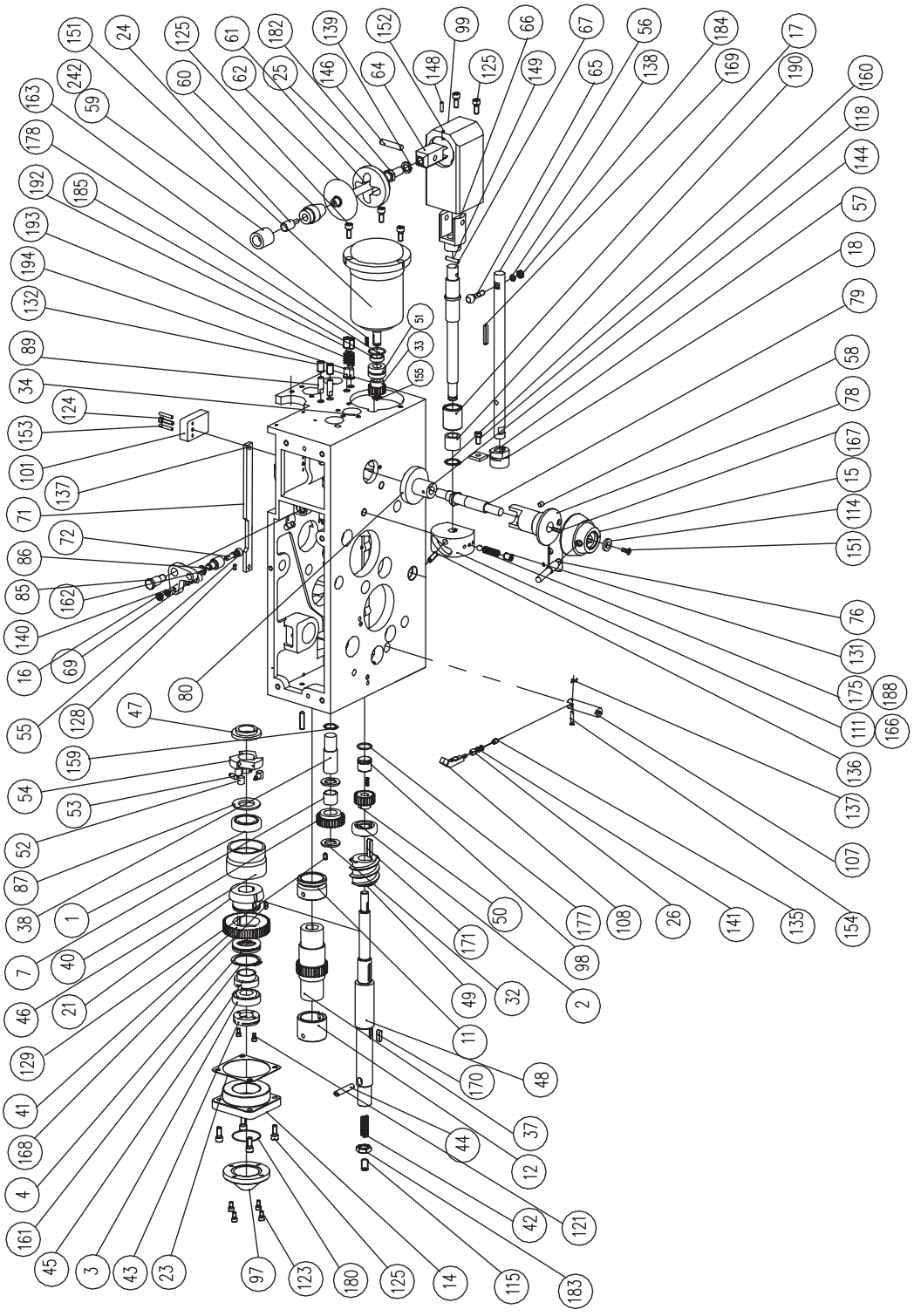
151
24
125
61
182
139
152
99
66
67
56
184
17
242
59
60
62
25
146
64
148
125
149
65
138
169
190
160
163
178
192
185
193
194
132
89
34
124
153
101
137
71
72
86
85
162
140
16
69
55
128
47
80
159
54
53
52
87
38
1
7
40
46
21
129
41
168
4
161
45
3
43
23
97
123
180
125
14
115
183
42
121
12
37
44
48
170
11
49
32
2
98
171
50
177
108
26
141
135
154
107
137
136
111
175
131
76
166
188
167
15
114
151
57
18
79
58
78
118
144
51
33
155

溜板箱 Apron

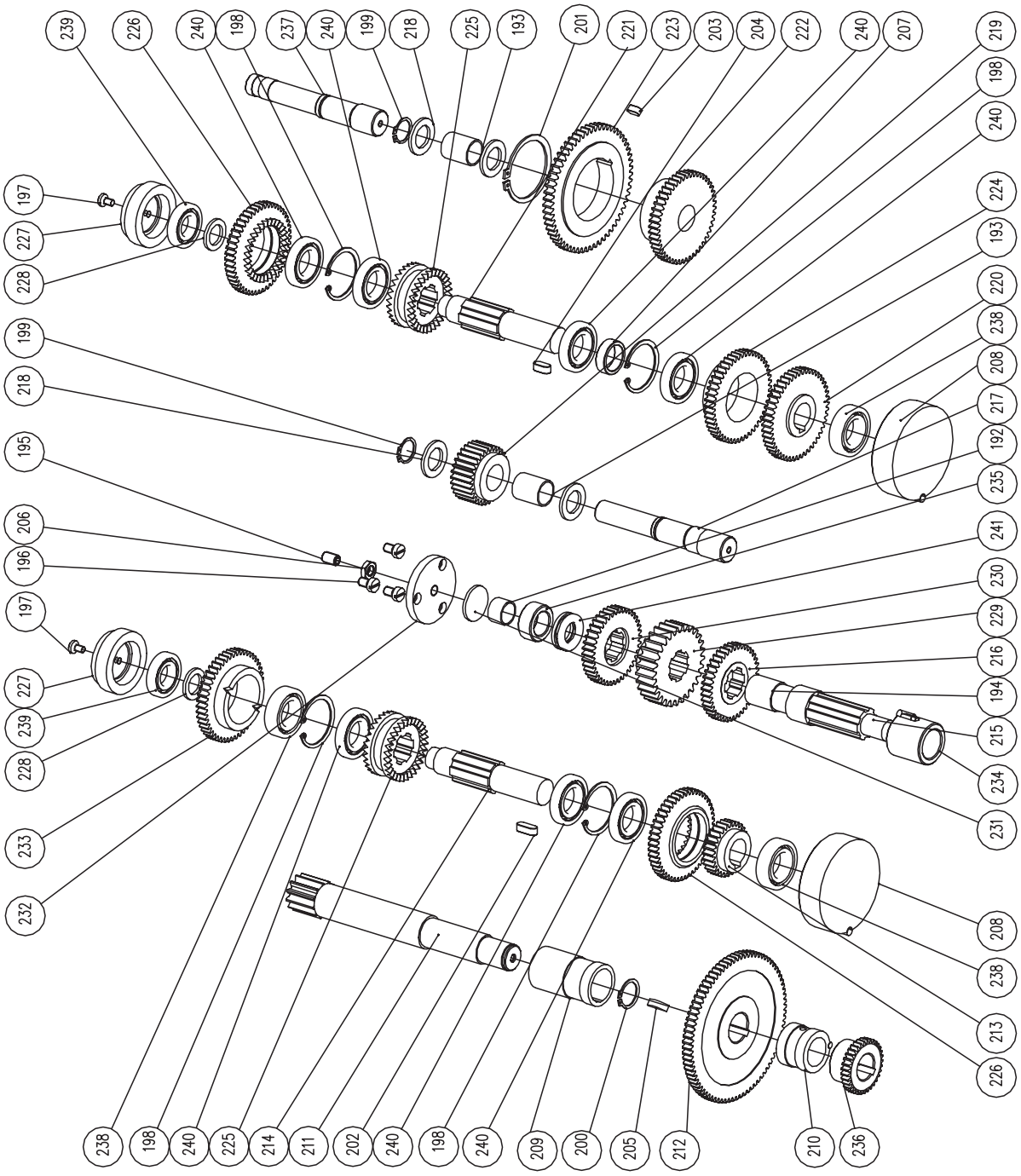
239
226
240
198
237
240
199
218
225
193
201
221
223
203
204
222
240
207
219
198
240
224
193
220
238
208
217
192
235
241
230
229
216
194
215
234
231
208
238
213
226
210
236
212
205
200
209
240
198
240
202
211
214
225
240
198
238
197
227
228
199
218
195
206
196
197
227
239
228
233
232

溜板箱 Apron

序号 Item	零件编号 Part Number	零件名称 Description	数量 Qty	序号 Item	零件编号 Part Number	零件名称 Description	数量 Qty
1	30X55X13; 6006	轴承 BEARING	1	35	CDS-26740	触头 TOUCH HEAD	1
2	20X47X15.25;30204	轴承 BEARING	1	36	CDS-26741	垫 WASHER	1
3	25X52X16.25;30205	轴承 BEARING	1	37	CDS-26742	齿轮轴 GEAR 36T	1
4	35X52X12; 51107	轴承 BEARING	1	38	CDS-26743	小轴 STUD	1
5	B16; Q99-1	滑块 SLIDE BLOCK	1	39	CDS-26744	结合子 CONE GEAR	1
6	16X18X15;1615DU	轴承衬套 BEARING BUSH	1	40	CDS-26745	齿轮 GEAR 32T	1
7	22X25X20;2220DU	轴承衬套 BEARING BUSH	1	41	CDS-26746	齿轮 GEAR 56T	1
8	CDS-13501	手柄 HANDGRIP	1	42	CDS-26747	弹簧 SPRING	1
9	CDS-26101	溜板箱体 APRON	1	43	CDS-26748	螺母 NUT	1
10	CDS-26105	手轮 HANDWHEEL	1	44	CDS-26749	顶销 JACK PIN	1
11	CDS-26112	套 BUSH	1	45	CDS-26750	套 BUSH	1
12	CDS-26113	套 BUSH	1	46	CDS-26751	锥结合子 CONE CLUTCH	1
13	CDS-26114	定位套 FIXING BUSH	1	47	CDS-26752	套 BUSH	1
14	CDS-26116	法兰盘 FLANGE TRAY	1	48	CDS-26753	轴 SHAFT	1
15	CDS-26117	手柄座 LEVER BASE	1	49	CDS-26754	螺旋齿轮 HELIX GEAR	1
16	CDS-26119	拨叉 SHIFTER FORK	1	50	CDS-26755	齿轮 GEAR 23T	1
17	CDS-26120	套 BUSH	1	51	CDS-26756	套 BUSH	1
18	CDS-26121	套 BUSH	1	52	CDS-26757	滚子 ROLLER	3
19	CDS-26123	套 BUSH	1	53	CDS-26758	弹簧套 SPRING SLEEVE	3
20	CDS-26125	杠杆 LEVER	1	54	CDS-26759	星轮 SPIDER	1
21	CDS-26301	锥结合子 CONE CLUTCH	1	55	CDS-26760	滚子 ROLLER	2
22	CDS-26501	手柄 LEVER	1	56	CDS-26761	轴 SHAFT	1
23	CDS-26502	垫 WASHER	1	57	CDS-26763	板 BOARD	1
24	CDS-26504	绝缘套 INSULATION GLAND	1	58	CDS-26764	销 PINS	1
25	CDS-26505	十字盖 CROSS COVER	1	59	CDS-26766	手柄盖 LEVER COVER	1
26	CDS-26705	滚子 ROLLER	1	60	CDS-26767	手柄座 LEVER BASE	1
27	CDS-26706	分度环 IDEX RING METRIC	1	61	CDS-26768	手柄杆 LEVER STUD	1
	CDS-26709	分度环 IDEX RING INCH	1	62	CDS-26769	防尘盖 SHIELD COVER	1
28	CDS-26711	螺钉 SCREW	1	63	CDS-26770	手柄螺钉 LEVER STUD	1
29	CDS-26712	弹簧 SPRING	1	64	CDS-26771	手柄座 LEVER BASE	1
30	CDS-26715	齿轮 GEAR 20T	1	65	CDS-26772	球面销 SPHERICAL PIN	1
31	CDS-26716	齿轮 GEAR 39T	1	66	CDS-26773	接头 TIE-IN	1
32	CDS-26720	垫 WASHER	2	67	CDS-26774	轴 SHAFT	1
33	CDS-26724	齿轮 GEAR 19T	1	68	CDS-26775	垫 WASHER	1
34	CDS-26727	螺钉 SCREW	1	69	CDS-26776	偏心销 PREJUDICIAL PIN	1

溜板箱 Apron

序号 Item	零件编号 Part Number	零件名称 Description	数量 Qty	序号 Item	零件编号 Part Number	零件名称 Description	数量 Qty
70	CDS-26777	滑轮轴 PULLEY SHAFT	1	105	CDS-26302	半螺母 HALF NUT-METRIC	1
71	CDS-26778	连杆 LEVER	1		CDS-26304	半螺母 HALF NUT-INCH	1
72	CDS-26780	销 PINS	4	106	CDS-26503	垫 WASHER	1
73	CDS-26781	销 PINS	1	107	CDS-26703	支撑轴 KNIGHTHEAD	1
74	CDS-26782	轴 SHAFT	1	108	CDS-26704	摆杆 SWING LINK	1
75	CDS-26784	调整螺钉ADJUSTABLE SCREW	1	109	CDS-26707	齿轮 GEAR	1
76	CDS-26785	手柄杆 LEVER STUD	1	110	CDS-26708	轴 SHAFT	1
77	CDS-26786	销 PINS	1	111	CDS-26762	凸轮 CAM	1
78	CDS-26787	套 BUSH	1	112	CDS-26803	齿轮结合子 CONE GEAR 35T	1
79	CDS-26788	轴 SHAFT	1	113	CDS-26804	轴 SHAFT	1
80	CDS-26789	凸轮 CAM	1	114	CDS-26807	板 BOARD	1
81	CDS-26790	轴 SHAFT	1	115	M16X1.5X35; DB1011	螺钉 SCREW	1
82	CDS-26791	套 BUSH	1	116	20; DB1801	油标 OIL-MARK	1
83	CDS-26792	轴 SHAFT	1	117	Z3/8; G38-3A	油塞BEARING	1
84	CDS-26793	凸轮 CAM	1	118	M8X16; GB65	螺钉 SCREW	1
85	CDS-26794	小轴 STUD	1	119	M5X12-Zn; GB68	螺钉 SCREW	2
86	CDS-26795	拨叉销 SHIFT FORK PIN	1	120	M6X12; GB68	螺钉 SCREW	2
87	CDS-26796	垫 WASHER	1	121	M5X10; GB70	螺钉 SCREW	3
88	CDS-26797	底板 BASE BOARD	1	122	M5X20; GB70	螺钉 SCREW	2
89	CDS-26798	小轴 STUD	2	123	M6X12; GB70	螺钉 SCREW	20
90	CDS-26799	推杆 HANDSPIKE	1	124	M6X25; GB70	螺钉 SCREW	1
91	CDS-26800	齿轮 GEAR 17T	1	125	M8X20; GB70	螺钉 SCREW	12
92	CDS-26801	轴 SHAFT	1	126	M8X65-Zn; GB70	螺钉 SCREW	2
93	CDS-26802	齿轮轴 GEAR SHAFT	1				
94	CDS-26102	套 BUSH	1	128	M5X10; GB71	螺钉 SCREW	1
95	CDS-26103	底座 BASE	1	129	M6X12; GB71	螺钉 SCREW	2
96	CDS-26104	支架 BRACKET	1	130	M10X10; GB77	螺钉 SCREW	1
97	CDS-26115	端盖 BRACKET	1	131	M12X16; GB77	螺钉 SCREW	1
98	CDS-26118	套 BUSH	1	132	M12X20; GB77	螺钉 SCREW	4
99	CDS-26122	防护罩 SHIELD	1	133	M6X6; GB77	螺钉 SCREW	1
100	CDS-26124	拨叉 SHIFTER FORK	1	134	M6X10; GB77	螺钉 SCREW	3
101	CDS-26126	板 BOARD	1	135	M8X12; GB78	螺钉 SCREW	1
102	CDS-26127	半开座 SPLIT-BASE	1	136	M8X35; GB78	螺钉 SCREW	2
103	CDS-26128	法兰盘 FLANGE TRAY	1	137	2X12; GB91	销 PINS	2
104	CDS-26129	拨叉 SHIFTER FORK	1	138	8; GB93	垫圈 WASHER	4

溜板箱 Apron

序号 Item	零件编号 Part Number	零件名称 Description	数量 Qty	序号 Item	零件编号 Part Number	零件名称 Description	数量 Qty
139	14-Zn; GB93	垫圈 WASHER	1	174	1.6X10X25; GB2089	弹簧 SPRING	2
140	8-Zn; GB93	垫圈 WASHER	1	175	1.6X10X50; GB2089	弹簧 SPRING	1
141	5-Zn; GB97.1	垫圈 BACKING RING	2	176	19X1.8; GB3452.1	密封圈 SEALING RING	1
142	6-Zn; GB97.1	垫圈 BACKING RING	1	177	21.2X1.8;GB3452.1	密封圈 SEALING RING	1
143	8-Zn; GB97.1	垫圈 BACKING RING	1	178	28X1.8; GB3452.1	密封圈 SEALING RING	1
144	A 5X30; GB117	销 PINS	1	179	5.6X1.8; GB3452.1	密封圈 SEALING RING	1
145	A 6X35; GB118	销 PINS	1	180	50X1.8; GB3452.1	密封圈 SEALING RING	1
146	A 10X50; GB119	销 PINS	1	181	M10; GB6170	螺母 NUT	1
147	A 12X26; GB119	销 PINS	1	182	M14X1.5;GB6173	螺母 NUT	1
148	A 5X18; GB119	销 PINS	1	183	M16X1.5; GB6173	螺母 NUT	1
149	A 6X30; GB119	销 PINS	1	184	M8X1; GB6173	螺母 NUT	2
150	A 8X60; GB119	销 PINS	1	185	15X26X7;GB9877.1	密封圈 SEALING RING	1
151	YSS2-5634	电机 250W,1360 r/min RAPID MOTOR	1	186	5; GB308-64	钢球 STEEL BALL	1
152	5X16; GB879	销 PINS	2	187	8; GB308-64	钢球 STEEL BALL	1
153	5X30; GB879	销 PINS	2	188	10; GB308-64	钢球 STEEL BALL	1
154	B5X24; GB882	销轴 PINS SHAFT	1	189	B20n6X25;Q41-1	轴套 SHAFT BUSH	1
155	14; GB894.1	挡圈 BAKSTOP	2	190	C28n6X25;Q41-1	轴套SHAFT BUSH	3
156	16; GB894.1	挡圈 BAKSTOP	2	191	22n6; Q56-1	堵 PLUG	1
157	17; GB894.1	挡圈 BAKSTOP	1	192	M12X20; GB77	螺钉 SCREW	2
158	20; GB894.1	挡圈 BAKSTOP	1	193	1.6×8×25; GB2089	弹簧 SPRING	2
159	22; GB894.1	挡圈 BAKSTOP	1	194	1.6×8×25; GB2089	压柱 PISTON	2
160	25; GB894.1	挡圈 BAKSTOP	1	192	20X23X15;2015DU	轴承衬套 BEARING BUSH	1
161	50; GB894.1	挡圈 BAKSTOP	1	193	22X25X30; 2230DU	轴承衬套 BEARING BUSH	2
162	9; GB896	挡圈 BAKSTOP	1	194	25X28X30;2530DU	轴承衬套 BEARING BUSH	1
163	4X16; GB1096	键 DRIVING MEDIUM	2	195	M10X1X16; DB1011	螺钉 SCREW	1
164	5X12; GB1096	键 DRIVING MEDIUM	1	196	M8X16; GB65	螺钉 SCREW	3
165	5X16; GB1096	键 DRIVING MEDIUM	1	197	M8X12-Zn;GB818	螺钉 SCREW	2
166	5X20; GB1096	键 DRIVING MEDIUM	2	198	47; GB893.1	挡圈 CIRCLIP	4
167	5X25; GB1096	键 DRIVING MEDIUM	1	199	22; GB894.1	挡圈 CIRCLIP	2
168	6X14; GB1096	键 DRIVING MEDIUM	2	200	25; GB894.1	挡圈 CIRCLIP	1
169	6X40; GB1096	键 DRIVING MEDIUM	1	201	60; GB894.1	挡圈 CIRCLIP	1
170	8X22; GB1096	键 DRIVING MEDIUM	1	202	5X16; GB1096	键 KEY	1
171	8X36; GB1096	键 DRIVING MEDIUM	1	203	6X14; GB1096	键 KEY	1
172	0.5X4X25; GB2089	弹簧 SPRING	3	204	8X18; GB1096	键 KEY	1
173	1.4X10X28; GB2089	弹簧 SPRING	1	205	6X22; GB1099	键 KEY	2

溜板箱 Apron

序号 Item	零件编号 Part Number	零件名称 Description	数量 Qty	序号 Item	零件编号 Part Number	零件名称 Description	数量 Qty
206	M10X1; GB6173	螺母 NUT	1	227	CDS-26732	轴承套 BEARING SHAFT	2
207	25X10; Q43-1	轴套 SHAFT BUSH	1	228	CDS-26733	垫 WASHER	2
208	CDS-26106	轴承支座BEARING BRACKET	2	229	CDS-26734	蜗轮 WORM GEAR 29T	1
209	CDS-26310	套 BUSH	1	230	CDS-26736	齿轮 GEAR 40T	1
210	CDS-26311	套 BUSH	1	231	CDS-26737	垫 WASHER	1
211	CDS-26701	齿轮轴 RACK PINION	1	232	CDS-26738	法兰盘 FLANGE TRAY	1
212	CDS-26702	齿轮 GEAR 80T	1	233	CDS-26739	齿轮 GEAR 48T	1
213	CDS-26713	齿轮 GEAR 28T	1	234	CDS-26107	套 BUSH	1
214	CDS-26714	轴 SHAFT	1	235	CDS-26109	套 BUSH	1
215	CDS-26717	轴 SHAFT	1	236	CDS-26710	齿轮 GEAR 33T	1
216	CDS-26718	齿轮 GEAR 40T	1	237	CDS-26725	轴 SHAFT	1
217	CDS-26719	轴 SHAFT	1	238	25X47X12; 6005	轴承 BEARING	3
218	CDS-26720	垫 WASHER	4	239	20X42X8; 16004	轴承 BEARING	2
219	CDS-26721	齿轮 GEAR 30T	1	240	25X47X8; 16005	轴承 BEARING	7
220	CDS-26722	齿轮 GEAR 48T	1	241	20X35X10; 51104	轴承 BEARING	1
221	CDS-26723	轴 SHAFT	1	242	LA9	快速按钮 RAPID SWT	1
222	CDS-26726	齿轮 GEAR 48T	1	243	C28n6×25;Q41-1	套 SLEEVE	1
223	CDS-26728	齿轮 GEAR 59T	1	244	16 ; GB894.1	挡圈 CIRCLIP	1
224	CDS-26729	齿轮 GEAR 48T	1	245	CDS-26780	销 PIN	1
225	CDS-26730	结合子 CONE GEAR	2	246	AS 1730	垫圈 BEARING WASHER	1
226	CDS-26731	齿轮 GEAR 48T	2	247	M6X6 ; GB77	螺钉 SCREW	1

溜板箱 Apron(R.H.)

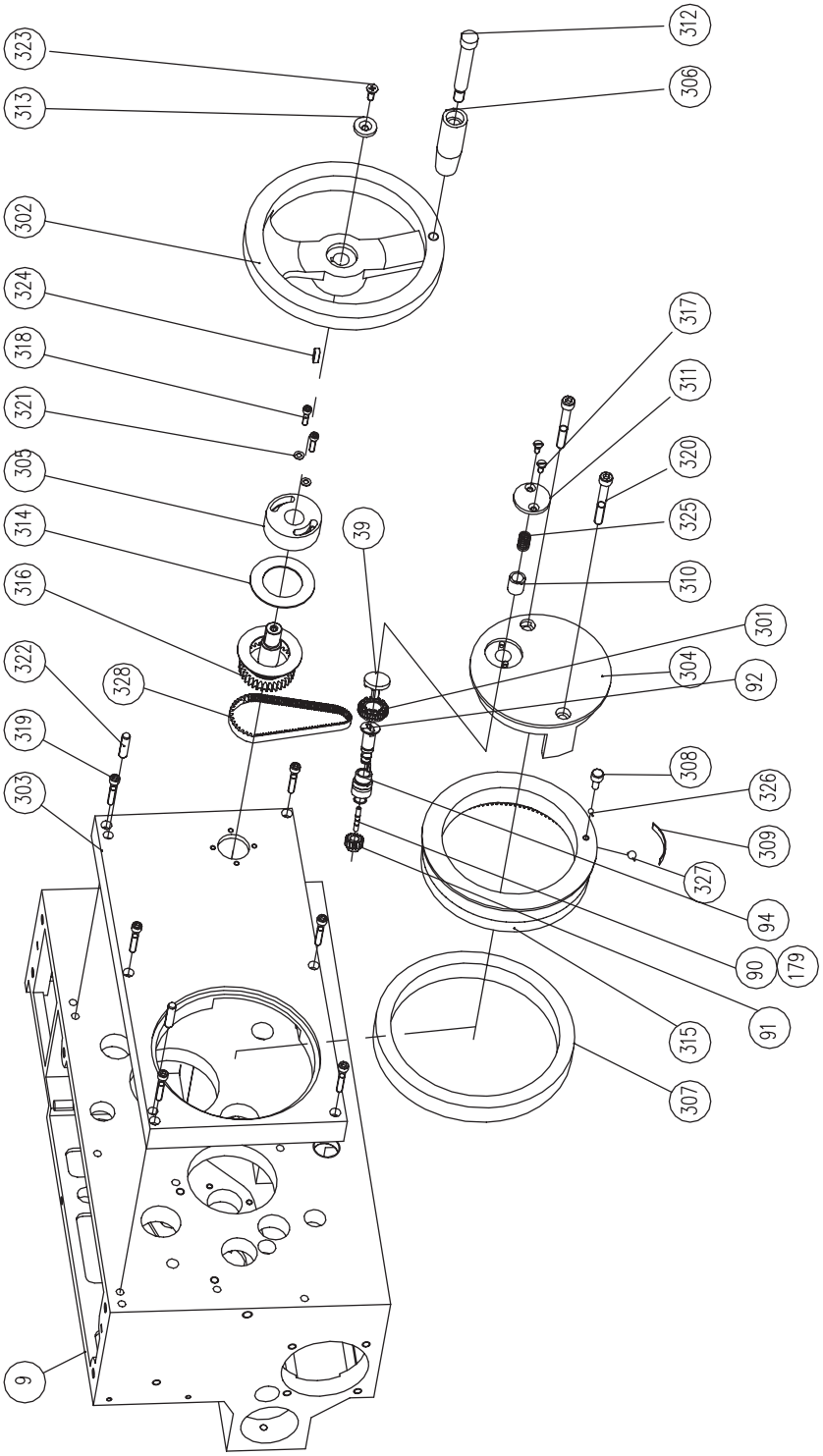
323
313
312
306
302
324
318
321
305
314
316
322
328
319
303
9
39
317
311
320
325
310
301
304
92
308
326
309
327
94
90
179
91
315
307

溜板箱 Apron (R.H.)

序号 Item	零件编号 Part Number	零件名称 Description	数量 Qty
301	CDS-26805	齿形皮带轮 TIME PULLEY	1
302	CDS -26105	手轮 HANDWHEEL	1
303	CDS -26130	盖 COVER	1
304	CDS -26131	支座 BRACKET	1
305	CDS -26132	法兰盘 FLANGE TRAY	1
306	CDS -26501	手柄 HANDGRIP	1
307	CDS-26706	分度环IDEX RING METRIC	1
	CDS-26709	分度环IDEX RING INCH	1
308	CDS-26711	螺钉 SCREW	1
309	CDS-26712	弹簧 SPRING	1
310	CDS-26740	触头 TOUCH HEAD	1
311	CDS-26741	垫 WASHER	1
312	CDS-26770	手柄螺钉 LEVER STUD	1
313	CDS-26775	垫 WASHER	1
314	CDS-26807	板 BOARD	2
315	CDS-26707	齿轮 GEAR	1
316	CDS-26806	齿形皮带轮 TIME PULLEY	1
317	M5X12-Zn; GB68	螺 钉 SCREW	2
318	M5X20; GB70	螺 钉 SCREW	2
319	M6X35; GB70	螺 钉 SCREW	6
320	M8X65-Zn;GB70	螺 钉 SCREW	2
321	5; GB97.1	垫圈 WASHER	2
322	B 8X32; GB120	销 PINS	2
323	M6X16; GB819	螺 钉 SCREW	1
324	5X20; GB1096	键 KEY	1
325	1.4X10X28;GB2089	弹簧 SPRING	1
326	5; GB308-64	钢球 STEEL BALL	1
327	8; GB308-64	钢球 STEEL BALL	1
328	760-8M-15	齿形带 TIME BELT	1

进给箱 Gearbox

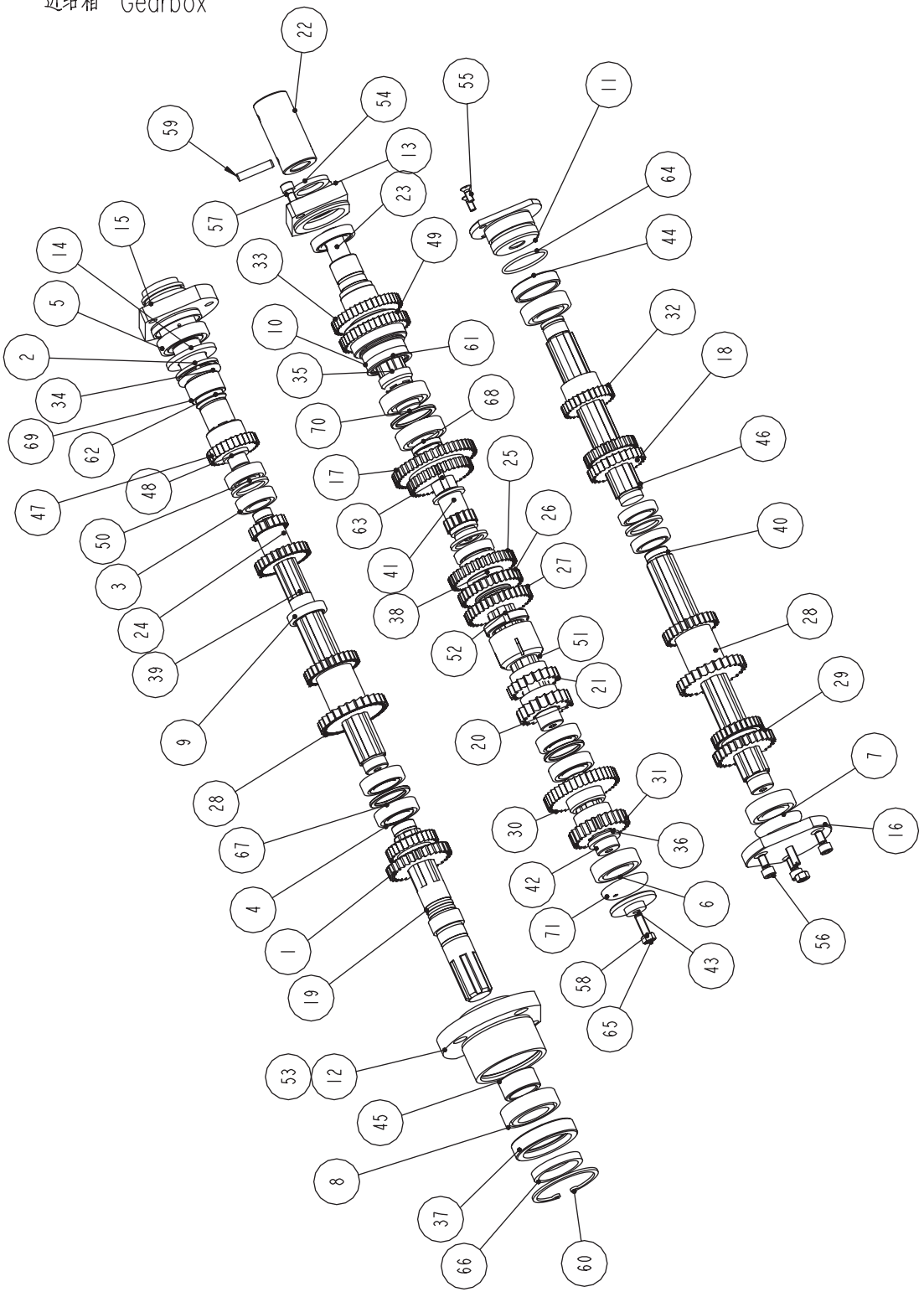
22
59
54
55
11
13
57
23
64
15
49
44
14
33
5
10
61
32
2
35
18
34
68
70
46
69
62
17
25
48
63
26
40
47
41
27
50
38
28
3
52
51
24
21
29
39
20
7
9
31
30
16
28
36
67
42
6
4
71
56
1
43
19
58
65
53
12
45
8
37
66
60

进给箱 Gearbox

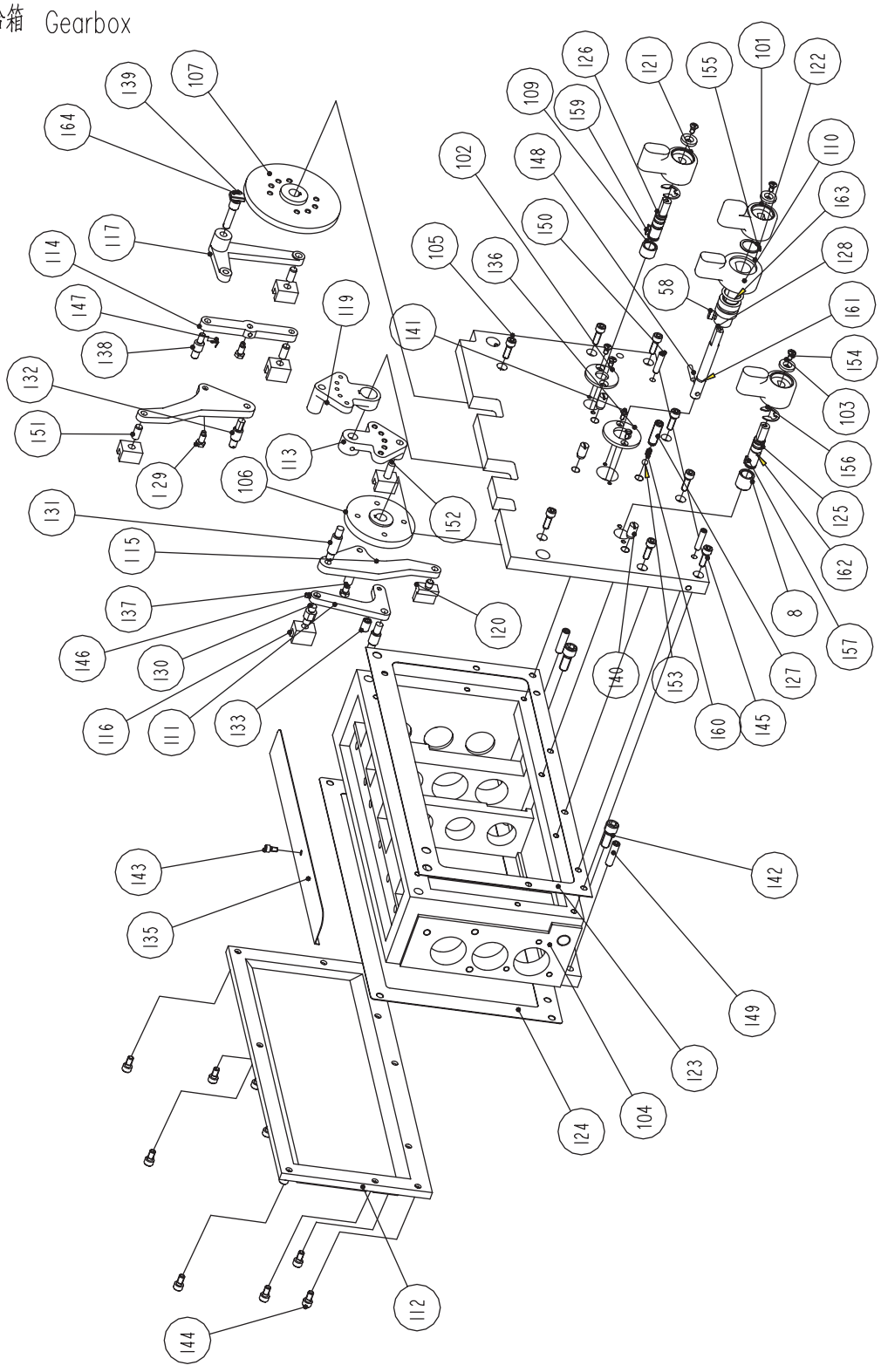
164
139
107
114
117
147
138
132
151
129
119
141
113
106
131
115
137
146
130
116
111
133
120
152
105
136
102
148
150
109
159
126
121
155
101
122
110
163
128
58
161
154
103
156
125
162
8
157
127
140
153
160
145
143
135
142
149
123
104
124
112
144

进给箱 Gearbox

序号 Item	零件编号 Part Number	零件名称 Description	数量 Qty	序号 Item	零件编号 Part Number	零件名称 Description	数量 Qty
1	CDS-27706	齿轮 Gear 30T/29T	1	36	CDS-27727	II轴 Shaft II	1
2	51106	轴承 Bearing 30X47X11	2	37	CDS-27728	套 Sleeve	1
3	6004	轴承 Bearing 20X42X12	2	38	CDS-27729	IV轴 Shaft IV	1
4	6005	轴承 Bearing 25X47X12	4	39	CDS-27730	V轴 Shaft V	1
5	51106	轴承 Bearing 30X55X13	1	40	CDS-27731	III轴 Shaft III	1
6	6205	轴承 Bearing 25X52X15	4	41	CDS-27732	齿轮轴 Gear Shaft 15T	1
7	6205	轴承 Bearing 25X52X15	1	42	CDS-27733	垫 Washer	1
8	6206	轴承 Bearing 30X62X16	1	43	CDS-27734	顶块 Plate	1
9	61905	轴承 Bearing 25X42X9	4	44	CDS-27735	套 Sleeve	1
10	61906	轴承 Bearing 30X47X9	3	45	CDS-27736	垫 Washer	1
11	CDS-27105	法兰盘 Flange tray	1	46	CDS-27744	VII 轴 Shaft VII	1
12	CDS-27110	法兰盘 Flange tray	1	47	CDS-27745	垫 Washer	1
13	CDS-27111	法兰盘 Flange tray	1	48	CDS-27746	齿轮 Gear 29T	1
14	CDS-27120	垫 Washer	1	49	CDS-27747	齿轮 Gear 41T	1
15	CDS-27121	法兰盘 Flange tray	1	50	CDS-27748	垫 Washer	3
16	CDS-27123	法兰盘 Flange tray	1	51	CDS-27754	调整螺母 Adjust nut	1
17	CDS-27703	齿轮 Gear 35T/45T	1	52	CDS-27757	螺母 Nut	1
18	CDS-27704	齿轮 Gear 48T/28T	1	53	35 G51-1	衬圈 Seal	1
19	CDS-27706	I轴 Shaft I	1	54	30 G51-1	衬圈 Seal	1
20	CDS-27708	齿轮 Gear 21T	1	55	M6X16 GB68	螺钉 Screw	2
21	CDS-27709	齿轮 Gear 22T	1	56	M8X16 GB70	螺钉 Screw	3
22	CDS-27710	套 Sleeve	1	57	M8X20 GB70	螺钉 Screw	2
23	CDS-27711	VIII轴 Shaft VIII	1	58	M8X25 GB73	螺钉 Screw	2
24	CDS-27712	齿轮 Gear28T/18T	1	59	A 8X40 GB119	销 Pin	1
25	CDS-27713	齿轮 Gear 36T	1	60	70 GB893.1	挡圈 Circlip	1
26	CDS-27714	齿轮 Gear 33T	1	61	47 GB893.1	挡圈 Circlip	2
27	CDS-27715	齿轮 Gear 35T	1	62	30 GB894.1	挡圈 Circlip	1
28	CDS-27716	齿轮 Gear 28T/28T	2	63	6X22 GB1099	键 Key	1
29	CDS-27717	齿轮 Gear 28T/30T	1	64	46.2X2.65 GB3452.1	密封圈 O-ring	1
30	CDS-27718	齿轮 Gear 41T	1	65	M8 GB6170	螺母 Nut	2
31	CDS-27719	齿轮 Gear 27T	1	66	40X55X8 GB9877.1	密封圈 Oil seal	1
32	CDS-27720	齿轮 Gear 30T	1	67	35X3 Q43-1	隔套 Spacer	2
33	CDS-27723	齿轮 Gear 41T	1	68	25X6 Q43-1	隔套 Spacer	1
34	CDS-27724	IX轴 Shaft IX	1	69	30X20 Q43-1	隔套 Spacer	2
35	CDS-27726	套 Sleeve	1	70	40X3 Q43-1	隔套 Spacer	1

进给箱 Gearbox

序号 Item	零件编号 Part Number	零件名称 Description	数量 Qty	序号 Item	零件编号 Part Number	零件名称 Description	数量 Qty
71	52 Q55-8	顶盘 Plate	2	135	CDS-27749	盖板 Cover	1
101	CDS-20307	手柄 Handle	1	136	CDS-27750	定位板 Washer	1
102	CDS-20768	垫 Plate	1	137	CDS-27751	偏心轴 Shaft	1
103	CDS-20769	垫 Washer	3	138	CDS-27752	小轴 Shaft	1
104	CDS 27101	进给箱 Gearbox body	1	139	CDS-27753	小轴 Shaft	1
105	CDS-27102	前盖 Front cover	1	140	M12 FS-0050	钢球螺钉 Ball detent SCR	3
106	CDS-27103	凹轮 Cam	1	141	M5X12 GB68	螺钉 Screw	2
107	CDS-27104	凹轮 Cam	1	142	M12X30 GB70	螺钉 Screw	2
108	CDS-27106	轴套 Sleeve	1	143	M6X12 GB70	螺钉 Screw	1
109	CDS-27107	轴套 Sleeve	1	144	M8X16 GB70	螺钉 Screw	10
110	CDS-27108	轴套 Sleeve	1	145	M8X25 GB70	螺钉 Screw	8
111	CDS-27109	拨杆 poke rod	1	146	M6X8 GB78	螺钉 Screw	1
112	CDS-27112	后盖 Rear cover	1	147	2X12 GB91	销 Pin	1
113	CDS-27113	拨杆 poke rod	1	148	A 6X30 GB117	销 Pin	1
114	CDS-27114	拨杆 poke rod	1	149	A10X40 GB118	销 Pin	2
115	CDS-27115	拨杆 poke rod	2	150	A 8X35 GB118	销 Pin	2
116	CDS-27116	拨叉 Shifter fork	2	151	A 10X22 GB119	销 Pin	3
117	CDS-27118	拨杆 poke rod	1	152	A 10X30 GB119	销 Pin	1
118	CDS-27119	拨叉 Shifter fork	3	153	8 GB308	钢球 Ball	1
119	CDS-27122	拨杆 poke rod	1	154	M6X12-Zn GB820	螺钉 Screw	5
120	CDS-27124	拨叉 Shifter fork	1	155	25 GB894.1	挡圈 CIRCLIP	1
121	CDS-27301	手柄 Handle	2	156	15 GB896	挡圈 CIRCLIP	2
122	CDS-27302	手柄 Handle	1	157	5X12 GB1096	键 key	1
123	CDS-27501	前盖垫 Gasket	1	158	6X14 GB1096	键 key	1
124	CDS-27502	后垫 Gasket	1	159	4X16 GB1099	键 key	1
125	CDS-27701	轴 Shaft	1	160	1X6X15 GB2089	弹簧 Spring	1
126	CDS 27702	轴 Shaft	1	161	10.6X1.8 GB3452.1	密封圈 Oil seal	1
127	CDS-27705	定位螺钉 Screw	1	162	11.2X2.65 GB3452.1	密封圈 Oil seal	1
128	CDS-27722	手柄轴 Shaft	1	163	25X3.55 GB3452.1	密封圈 Oil seal	1
129	CDS-27738	偏心销 Pin	2	164	12 Q99-1	滑块 Glide block	1
130	CDS-27739	小轴 Shaft	1				
131	CDS-27740	小轴 Shaft	1				
132	CDS-27741	小轴 Shaft	1				
133	CDS-27742	滑动套 Sleeve	2				
134	CDS-27743	小轴 Shaft	1				

公制挂轮 （CDS6*40*/CDS6*50*/CDS6*56*） CHANGEGEARS for METRIC MACHINE

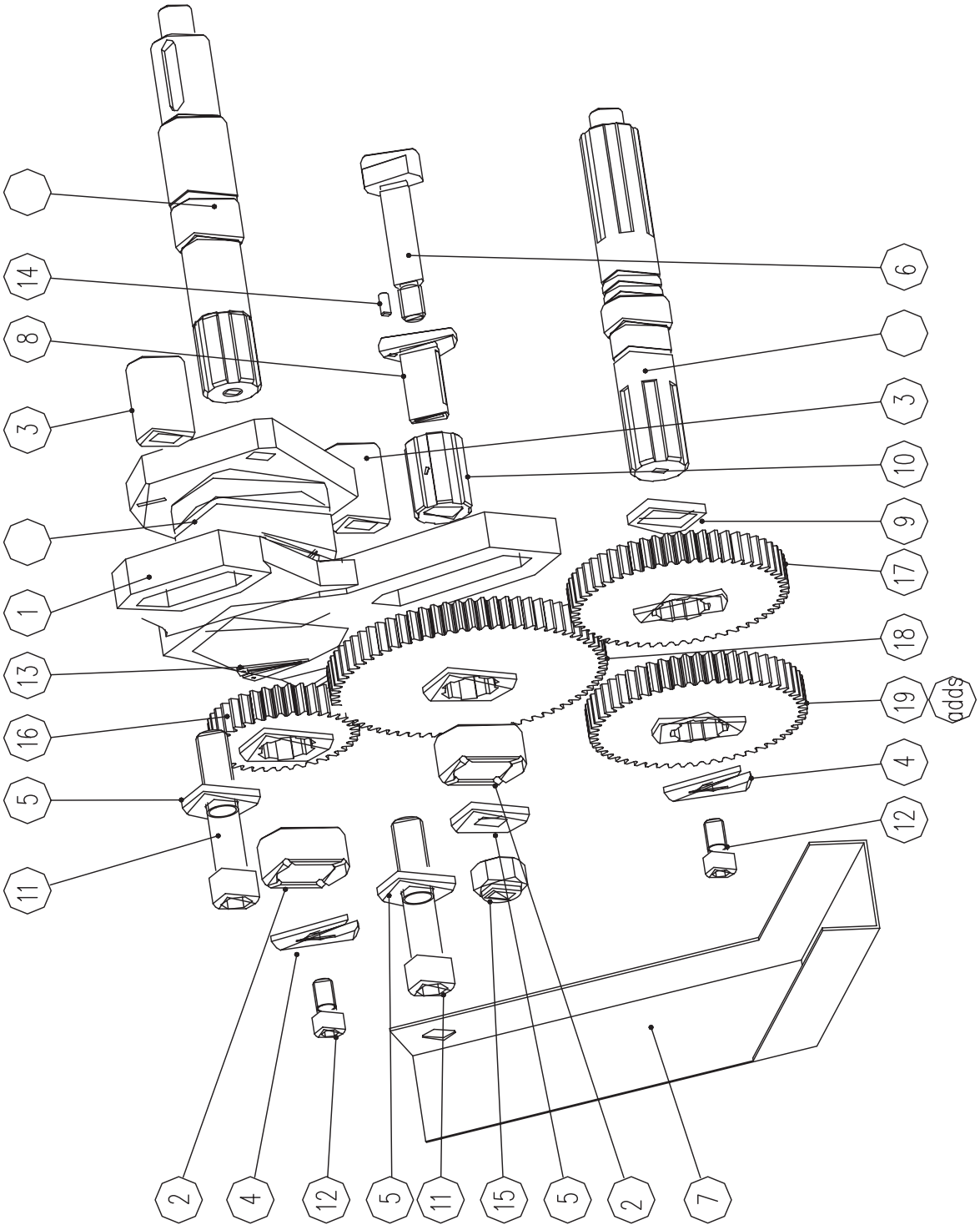

公制挂轮 （CDS6*40*/CDS6*50*/CDS6*56*） CHANGEGEARS for METRIC MACHINE

序号 Item	零件编号 Part Number	零件名称 Description	数量 Qty	备注 Remark
1	CDS-28102	挂轮板 BRACKET	1	
2	CDS-28103	套 SLEEVE	1~2	
3	CDS-28107	套 SLEEVE	2	
4	CDS-28701	开口垫 WASHER	2	
5	CDS-28702	垫 WASHER	3	
6	CDS-28703	轴 SHIFT	1	
7	CDS-28704	挡板 COVER	1	
8	CDS-28705	套 SLEEVE	1	
9	CDS-28707	调整垫 WASHER	1	
10	CDS-28301	花键套 SLEEVE	1	
11	M16X70,GB70	螺钉 SCWS	2	
12	M10X20,GB70	螺钉 SCWS	2	
13	30 , GB894.1	挡圈 CIRCLIP	1	
14	A5X12,GB119	销 PIN	1	
15	M16-Zn,GB889	锁紧螺母 NUT	1	
16	CDS-28104	齿轮 GEAR Z36X2	1	CDS6$\frac{1}{2}$40A 公制
17	CDS-28105	齿轮 GEAR Z54X2	1	
18	CDS-28501	齿轮 GEAR Z69X2	1	
19	CDS-28105	齿轮 GEAR Z54X2	1	
add1	CDS-28502	齿轮 GEAR Z57X2	(1)	
add2	CDS-28116	齿轮 GEAR Z78X2	(1)	
add3	CDS-28106	齿轮 GEAR Z48X2	(1)	
16	CDS-28104	齿轮 GEAR Z36X2	1	CDS6$\frac{1}{2}$50A 公制
17	CDS-28105	齿轮 GEAR Z54X2	1	
18	CDS-28101	齿轮 GEAR Z72X2	1	
19	CDS-28105	齿轮 GEAR Z54X2	1	
add1	CDS-28502	齿轮 GEAR Z57X2	(1)	
add2	CDS-28116	齿轮 GEAR Z78X2	(1)	
add3	CDS-28106	齿轮 GEAR Z48X2	(1)	
add4	CDS-28501	齿轮 GEAR Z69X2	(1)	
16	CDS-28104	齿轮 GEAR Z36X2	1	CDS6$\frac{1}{2}$40B 公制
17	CDS-28101	齿轮 GEAR Z72X2	1	
18	CDS-28502	齿轮 GEAR Z57X2	1	
19	CDS-28105	齿轮 GEAR Z54X2	1	
add1	CDS-28501	齿轮 GEAR Z69X2	(1)	
add2	CDS-28106	齿轮 GEAR Z78X2	(1)	

公制挂轮 （CDS6*40*/CDS6*50*/CDS6*56*） CHANGEGEARS for METRIC MACHINE

序号 Item	零件编号 Part Number	零件名称 Description	数量 Qty	备注 Remark
16	CDS-28104	齿轮 GEAR Z36X2	1	CDS6$\frac{1}{2}$50B 公制
17	CDS-28101	齿轮 GEAR Z72X2	1	
18	CDS-28501	齿轮 GEAR Z69X2	1	
19	CDS-28105	齿轮 GEAR Z54X2	1	
add1	CDS-28502	齿轮 GEAR Z57X2	(1)	
add2	CDS-28501	齿轮 GEAR Z69X2	(1)	
add3	CDS-28106	齿轮 GEAR Z78X2	(1)	
16	CDS-B28103	齿轮 GEAR Z36X2.25	1	CDS6$\frac{1}{2}$56B 公制
17	CDS-B28101	齿轮 GEAR Z72X2.25	1	
18	CDS-B28501	齿轮 GEAR Z69X2.25	1	
19	CDS-B28105	齿轮 GEAR Z54X2.25	1	
add1	CDS-B28503	齿轮 GEAR Z57X2.25	(1)	
add2	CDS-B28109	齿轮 GEAR Z78X2.25	(1)	
16	CDS-28112	齿轮 GEAR Z27X2	1	CDS6$\frac{1}{2}$40C 公制
17	CDS-28101	齿轮 GEAR Z72X2	1	
18	CDS-28502	齿轮 GEAR Z57X2	1	
19	CDS-28105	齿轮 GEAR Z54X2	1	
add1	CDS-28104	齿轮 GEAR Z36X2	1	
add2	CDS-28501	齿轮 GEAR Z69X2	(1)	
add3	CDS-28106	齿轮 GEAR Z78X2	(1)	
16	CDS-28112	齿轮 GEAR Z27X2	1	CDS6$\frac{1}{2}$50C 公制
17	CDS-28101	齿轮 GEAR Z72X2	1	
18	CDS-28501	齿轮 GEAR Z69X2	1	
19	CDS-28105	齿轮 GEAR Z54X2	1	
add1	CDS-28104	齿轮 GEAR Z36X2	1	
add2	CDS-28502	齿轮 GEAR Z57X2	(1)	
add3	CDS-28106	齿轮 GEAR Z78X2	(1)	
16	CDS-B28102	齿轮 GEAR Z27X2.25	1	CDS6$\frac{1}{2}$56C 公制
17	CDS-B28101	齿轮 GEAR Z72X2.25	1	
18	CDS-B28501	齿轮 GEAR Z69X2.25	1	
19	CDS-B28105	齿轮 GEAR Z54X2.25	1	
add1	CDS-B28103	齿轮 GEAR Z36X2.25	1	
add2	CDS-B28503	齿轮 GEAR Z57X2.25	(1)	
add3	CDS-B28109	齿轮 GEAR Z78X2.25	(1)	

英制挂轮 （CDS6*40*/CDS6*50*/CDS6*56*） CHANGEGEARS for IMPERIAL MACHINE

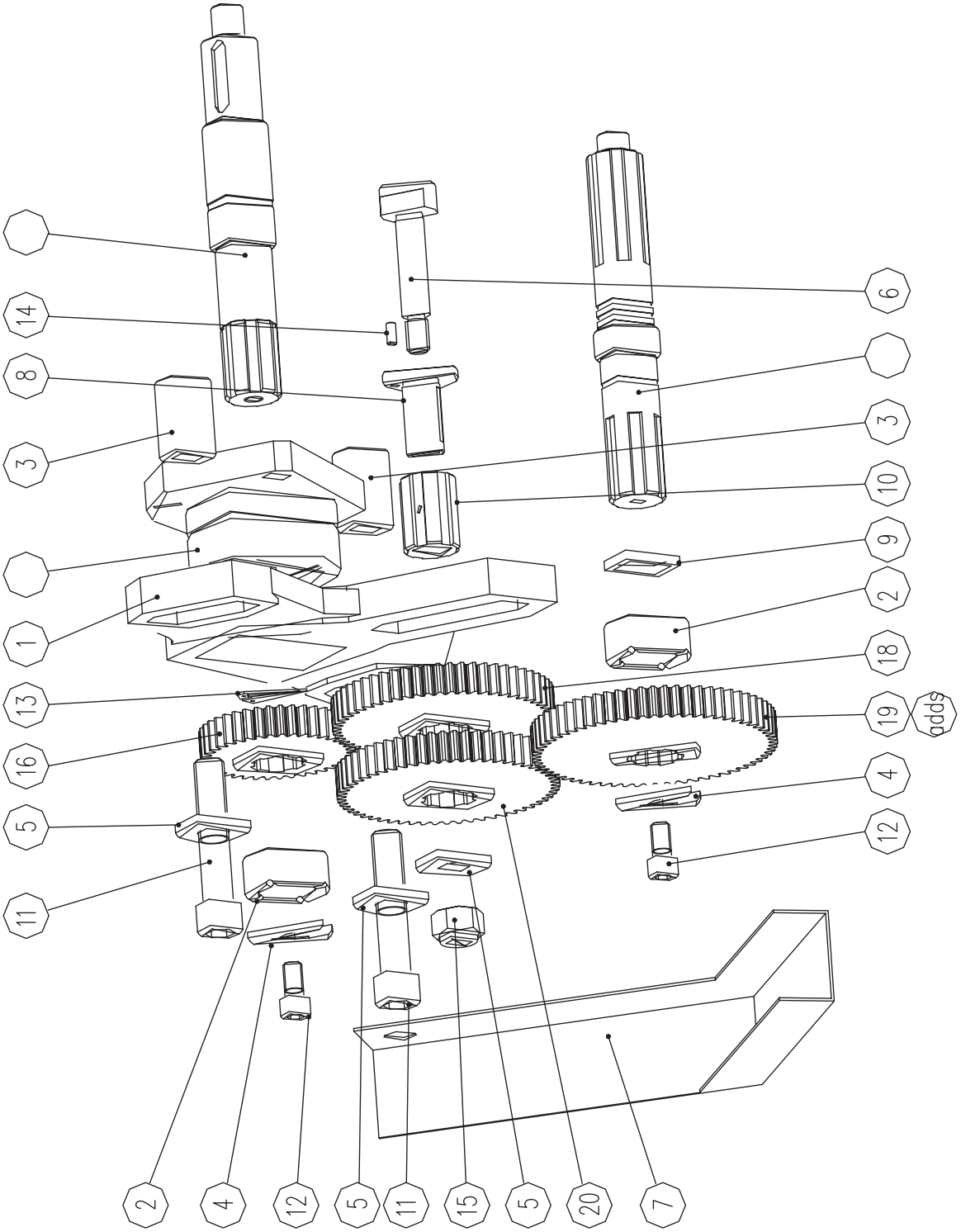

英制挂轮 （CDS6*40*/CDS6*50*/CDS6*56*） CHANGEGEARS for IMPERIAL MACHINE

序号 Item	零件编号 Part Number	零件名称 Description	数量 Qty	备注 Remark
1	CDS-28102	挂轮板 BRACKET	1	
2	CDS-28103	套 SLEEVE	1~2	
3	CDS-28107	套 SLEEVE	2	
4	CDS-28701	开口垫 WASHER	2	
5	CDS-28702	垫 WASHER	3	
6	CDS-28703	轴 SHIFT	1	
7	CDS-28704	挡板 COVER	1	
8	CDS-28705	套 SLEEVE	1	
9	CDS-28707	调整垫 WASHER	1	
10	CDS-28301	花键套 SLEEVE	1	
11	M16X70,GB70	螺钉 SCWS	2	
12	M10X20,GB70	螺钉 SCWS	2	
13	30 , GB894.1	挡圈 CIRCLIP	1	
14	A5X12,GB119	销 PIN	1	
15	M16-Zn,GB889	锁紧螺母 NUT	1	
16	CDS-28108	齿轮 GEAR Z39X2	1	
18	CDS-28502	齿轮 GEAR Z57X2	1	
19	CDS-28110	齿轮 GEAR Z63X2	1	CDS6$\frac{1}{2}$40A 英制
20	CDS-28109	齿轮 GEAR Z58X2	1	
add1	CDS-28501	齿轮 GEAR Z69X2	(1)	
add2	CDS-28111	齿轮 GEAR Z32X2	(1)	
16	CDS-28108	齿轮 GEAR Z39X2	1	
18	CDS-28502	齿轮 GEAR Z57X2	1	
19	CDS-A28119	齿轮 GEAR Z63X2.25	1	CDS6$\frac{1}{2}$50A 英制
20	CDS-A28511	齿轮 GEAR Z58X2.25	1	
add1	CDS-28501	齿轮 GEAR Z69X2	(1)	
add2	CDS-28111	齿轮 GEAR Z32X2	(1)	
16	CDS-28108	齿轮 GEAR Z39X2	1	
18	CDS-28503	齿轮 GEAR Z76X2	1	
19	CDS-28110	齿轮 GEAR Z63X2	1	CDS6$\frac{1}{2}$40B 英制
20	CDS-28109	齿轮 GEAR Z58X2	1	
add1	CDS-28501	齿轮 GEAR Z69X2	(1)	
add2	CDS-28106	齿轮 GEAR Z48X2	(1)	

英制挂轮 （CDS6*40*/CDS6*50*/CDS6*56*） CHANGEGEARS for IMPERIAL MACHINE

序号 Item	零件编号 Part Number	零件名称 Description	数量 Qty	备注 Remark
16	CDS-28108	齿轮 GEAR Z39X2	1	CDS6$\frac{1}{2}$50B 英制
18	CDS-28503	齿轮 GEAR Z76X2	1	
19	CDS-A28119	齿轮 GEAR Z63X2.25	1	
20	CDS-A28511	齿轮 GEAR Z58X2.25	1	
add1	CDS-28501	齿轮 GEAR Z69X2	(1)	
add2	CDS-28502	齿轮 GEAR Z57X2	(1)	
16	CDS-28113	齿轮 GEAR Z29X2	1	CDS6$\frac{1}{2}$40C 英制
18	CDS-28503	齿轮 GEAR Z76X2	1	
19	CDS-28115	齿轮 GEAR Z56X2	1	
20	CDS-28114	齿轮 GEAR Z52X2	1	
add1	CDS-28104	齿轮 GEAR Z36X2	(1)	
add2	CDS-28108	齿轮 GEAR Z39X2	(1)	
add3	CDS-28106	齿轮 GEAR Z48X2	(1)	
add4	CDS-28502	齿轮 GEAR Z57X2	(1)	
add5	CDS-28501	齿轮 GEAR Z69X2	(1)	
add6	CDS-28110	齿轮 GEAR Z63X2	(1)	
add7	CDS-28109	齿轮 GEAR Z58X2	(1)	
16	CDS-28113	齿轮 GEAR Z29X2	1	CDS6$\frac{1}{2}$50C 英制
18	CDS-28503	齿轮 GEAR Z76X2	1	
19	CDS-A28120	齿轮 GEAR Z56X2.5	1	
20	CDS-A28512	齿轮 GEAR Z52X2.5	1	
add1	CDS-A28119	齿轮 GEAR Z63X2.25	(1)	
add2	CDS-A28511	齿轮 GEAR Z58X2.25	(1)	
add3	CDS-28502	齿轮 GEAR Z57X2	(1)	
add4	CDS-28501	齿轮 GEAR Z69X2	(1)	
add5	CDS-28115	齿轮 GEAR Z56X2	(1)	
add6	CDS-28114	齿轮 GEAR Z52X2	(1)	
add7	CDS-28106	齿轮 GEAR Z48X2	(1)	
add8	CDS-28104	齿轮 GEAR Z36X2	(1)	
add9	CDS-28108	齿轮 GEAR Z39X2	(1)	

英制挂轮 （CDS6*40*/CDS6*50*/CDS6*56*） CHANGEGEARS for IMPERIAL MACHINE

序号 Item	零件编号 Part Number	零件名称 Description	数量 Qty	备注 Remark
16	CDS-B28104	齿轮 GEAR Z29X2.5	1	CDS6$\frac{1}{2}$56C 英制
18	CDS-B28502	齿轮 GEAR Z76X2.5	1	
19	CDS-A28120	齿轮 GEAR Z56X2.5	1	
20	CDS-A28512	齿轮 GEAR Z52X2.5	1	
add1	CDS-A28119	齿轮 GEAR Z63X2.25	(1)	
add2	CDS-A28511	齿轮 GEAR Z58X2.25	(1)	
add3	CDS-B28107	齿轮 GEAR Z39X2.5	(1)	
add4	CDS-B28106	齿轮 GEAR Z48X2.25	(1)	
add5	CDS-B28101	齿轮 GEAR Z72X2.25	(1)	
add6	CDS-B28103	齿轮 GEAR Z36X2.25	(1)	
add7	CDS-B28503	齿轮 GEAR Z57X2.25	(1)	
add8	CDS-B28501	齿轮 GEAR Z69X2.25	(1)	
16	CDS-B28107	齿轮 GEAR Z39X2.5	1	CDS6$\frac{1}{2}$56B 英制
18	CDS-B28502	齿轮 GEAR Z76X2.5	1	
19	CDS-A28119	齿轮 GEAR Z63X2.25	1	
20	CDS-A28511	齿轮 GEAR Z58X2.25	1	
add1	CDS-B28104	齿轮 GEAR Z29X2.5	(1)	
add2	CDS-B28106	齿轮 GEAR Z48X2.25	(1)	
add3	CDS-B28101	齿轮 GEAR Z72X2.25	(1)	
add4	CDS-B28503	齿轮 GEAR Z57X2.25	(1)	
add5	CDS-B28501	齿轮 GEAR Z69X2.25	(1)	

英制挂轮 （CDS6*66*/CDS6*76）　　CHANGEGEARS for IMPERIAL MACHINE

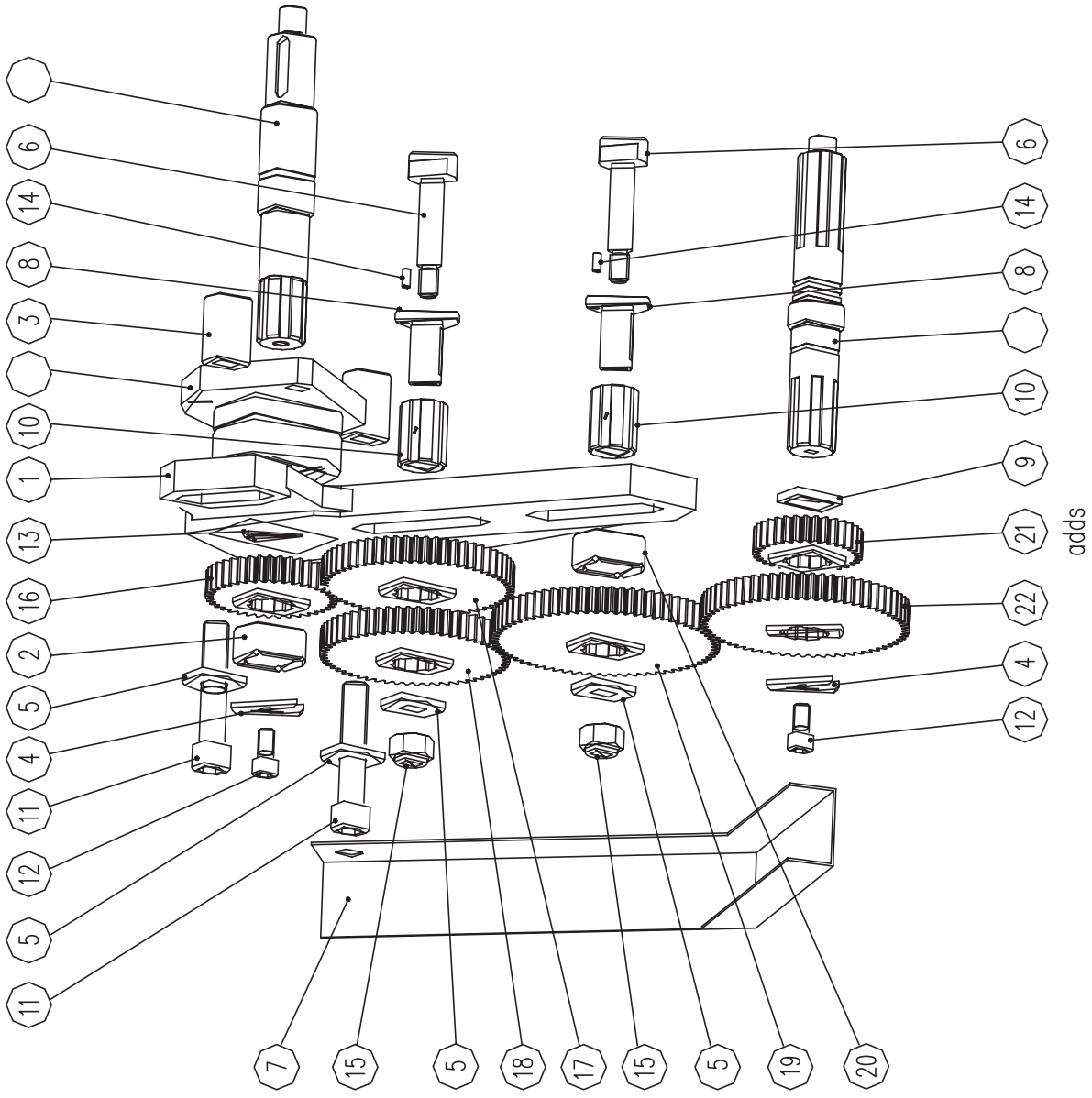

英制挂轮 （CDS6*66*/CDS6*76） CHANGEGEARS for IMPERIAL MACHINE

序号 Item	零件编号 Part Number	零件名称 Description	数量 Qty	备注 Remark
1	CDS-C28102	挂轮板 BRACKET	1	
2	CDS-28103	套 SLEEVE	1	
3	CDS-28107	套 SLEEVE	2	
4	CDS-28701	开口垫 WASHER	2	
5	CDS-28702	垫 WASHER	4	
6	CDS-28703	轴 SHIFT	1	
7	CDS-C28704	挡板 COVER	1	
8	CDS-28705	套 SLEEVE	1	
9	CDS-28707	调整垫 WASHER	1	
10	CDS-28301	花键套 SLEEVE	1	
11	M16X70,GB70	螺钉 SCWS	2	
12	M10X20,GB70	螺钉 SCWS	2	
13	30 , GB894.1	挡圈 CIRCLIP	1	
14	A5X12,GB119	销 PIN	1	
15	M16-Zn,GB889	锁紧螺母 NUT	1	
16	CDS-28108	齿轮 GEAR Z39X2	1	CDS6$\frac{1}{2}$66A 英制
17	CDS-28502	齿轮 GEAR Z57X2	1	
18	CDS-28109	齿轮 GEAR Z58X2	1	
19	CDS-28501	齿轮 GEAR Z69X2	1	
20	CDS-28103	套 SLEEVE	1	
21	CDS-28110	齿轮 GEAR Z63X2	1	
22	CDS-28111	齿轮 GEAR Z32X2	1	
16	CDS-28108	齿轮 GEAR Z39X2	1	CDS6$\frac{1}{2}$66B 英制 CDS6$\frac{1}{2}$76B 英制
17	CDS-28503	齿轮 GEAR Z76X2	1	
18	CDS-28109	齿轮 GEAR Z58X2	1	
19	CDS-28502	齿轮 GEAR Z57X2	1	
20	CDS-28103	套 SLEEVE	1	
21	CDS-28110	齿轮 GEAR Z63X2	1	
22	CDS-28501	齿轮 GEAR Z69X2	1	
add1	CDS-28106	齿轮 GEAR Z48X2	(1)	

英制挂轮 （CDS6*66*/CDS6*76） CHANGEGEARS for IMPERIAL MACHINE

序号 Item	零件编号 Part Number	零件名称 Description	数量 Qty	备注 Remark
16	CDS-28113	齿轮 GEAR Z29X2	1	CDS6$\frac{1}{2}$66C 英制 CDS6$\frac{1}{2}$76C 英制
17	CDS-28503	齿轮 GEAR Z76X2	1	
18	CDS-28114	齿轮 GEAR Z52X2	1	
19	CDS-28501	齿轮 GEAR Z69X2	1	
20	CDS-28103	套 SLEEVE	1	
21	CDS-28115	齿轮 GEAR Z56X2	1	
22	CDS-28502	齿轮 GEAR Z57X2	1	
add1	CDS-28106	齿轮 GEAR Z48X2	(1)	
add2	CDS-28109	齿轮 GEAR Z58X2	(1)	
add3	CDS-28110	齿轮 GEAR Z63X2	(1)	

公制挂轮 （CDS6*66*/CDS6*76）

CHANGEGEARS for METRIC MACHINE

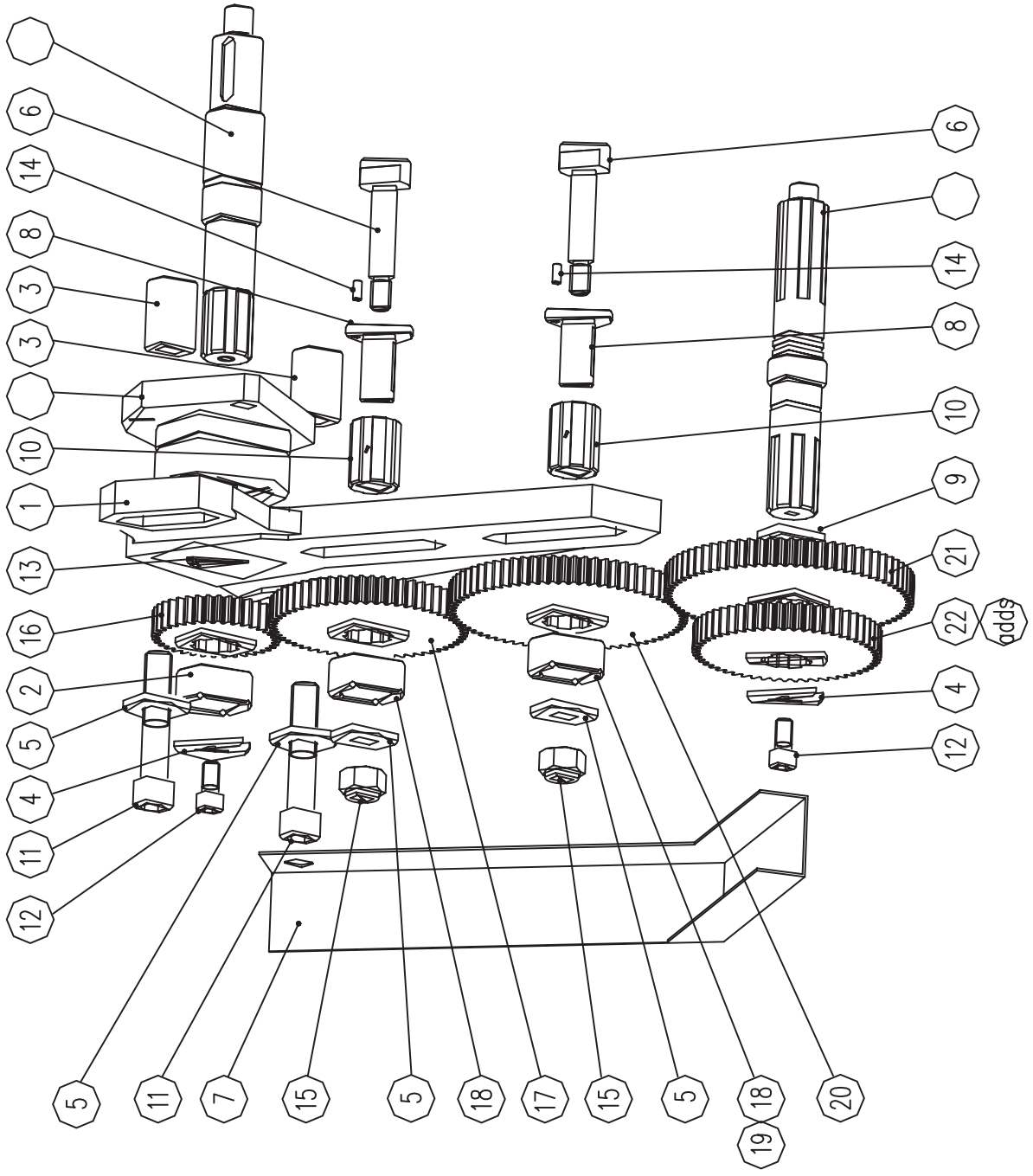

公制挂轮 （CDS6*66*/CDS6*76） CHANGEGEARS for METRIC MACHINE

序号 Item	零件编号 Part Number	零件名称 Description	数量 Qty	备注 Remark
1	CDS-C28102	挂轮板 BRACKET	1	
2	CDS-28103	套 SLEEVE	1	
3	CDS-28107	套 SLEEVE	2	
4	CDS-28701	开口垫 WASHER	2	
5	CDS-28702	垫 WASHER	4	
6	CDS-28703	轴 SHIFT	1	
7	CDS-C28704	挡板 COVER	1	
8	CDS-28705	套 SLEEVE	1	
9	CDS-28707	调整垫 WASHER	1	
10	CDS-28301	花键套 SLEEVE	1	
11	M16X70,GB70	螺钉 SCWS	2	
12	M10X20,GB70	螺钉 SCWS	2	
13	30 , GB894.1	挡圈 CIRCLIP	1	
14	A5X12,GB119	销 PIN	1	
15	M16-Zn,GB889	锁紧螺母 NUT	1	
16	CDS-28104	齿轮 GEAR Z36X2	1	
17	CDS-28502	齿轮 GEAR Z57X2	1	
18	CDS-28103	套 sleeve	2	
20	CDS-28501	齿轮 GEAR Z69X2	1	CDS6½66A 公制
21	CDS-28105	齿轮 GEAR Z54X2	1	
22	CDS-28105	齿轮 GEAR Z54X2	1	
add1	CDS-28106	齿轮 GEAR Z48X2	(1)	
add2	CDS-28116	齿轮 GEAR Z78X2	(1)	
		套 SLEEVE		
16	CDS-28104	齿轮 GEAR Z36X2	1	
17	CDS-28502	齿轮 GEAR Z57X2	1	CDS6½66B 公制
18	CDS-28103	套 SLEEVE	2	CDS6½76B 公制
20	CDS-28501	齿轮 GEAR Z69X2	1	
21	CDS-28101	齿轮 GEAR Z72X2	1	
22	CDS-28105	齿轮 GEAR Z54X2	1	
add1	CDS-28116	齿轮 GEAR Z78X2	(1)	

公制挂轮 （CDS6*66*/CDS6*76） CHANGEGEARS for METRIC MACHINE

序号 Item	零件编号 Part Number	零件名称 Description	数量 Qty	备注 Remark
16	CDS-28112	齿轮 GEAR Z27X2	1	
17	CDS-28502	齿轮 GEAR Z57X2	1	
18	CDS-28103	套 SLEEVE	1	
19	CDS-28104	齿轮 GEAR Z36X2	1	$CDS6\frac{1}{2}66C$ 公制
20	CDS-28501	齿轮 GEAR Z69X2	1	$CDS6\frac{1}{2}76C$ 公制
21	CDS-28101	齿轮 GEAR Z72X2	1	
22	CDS-28105	齿轮 GEAR Z54X2	1	
add1	CDS-28116	齿轮 GEAR Z78X2	(1)	

刀　架 TOOL POST

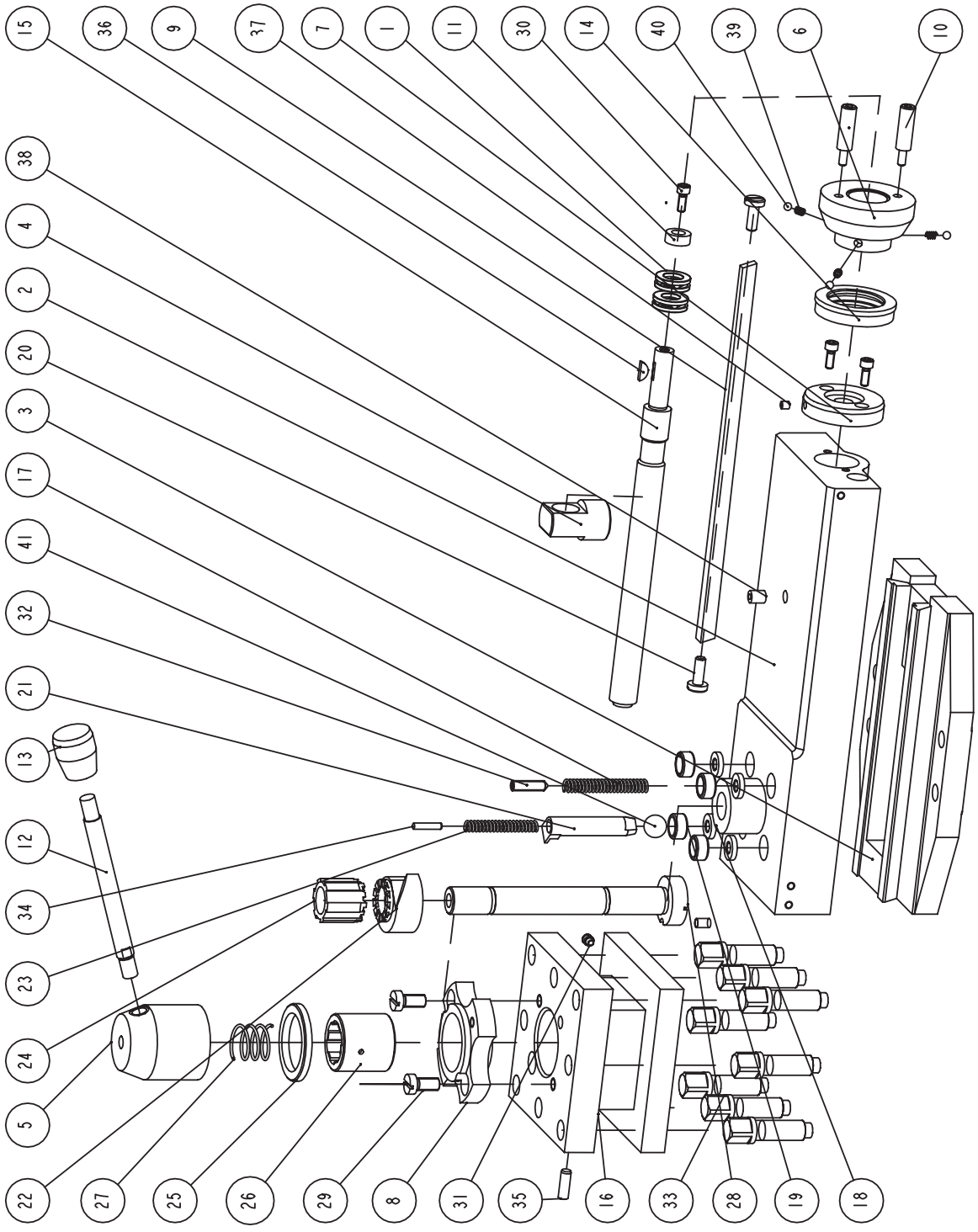
15
36
9
37
7
1
11
30
14
40
39
6
10
38
4
2
20
3
17
41
32
21
13
12
34
23
24
5
22
27
25
26
29
8
31
35
16
33
28
19
18

刀　架 TOOL POST

序号 Item	零件编号 Part Number	零件名称 Description	数量 Qty	序号 Item	零件编号 Part Number	零件名称 Description	数量 Qty
1	51102	轴　承 Bearing	2	29	M10X20;GB65	螺　钉 Screw	2
2	CDS-40101	小刀架 Top slid	1	30	M6X16;GB70	螺　钉 Screw	3
3	CDS-40102	转　盘 Base	1	31	M8X12;GB72	螺　钉 Screw	1
4	CDS-40103	公制螺母 Nut-metric	1	32	M8X30;GB78	螺　钉 Screw	1
	CDS-40106	英制螺母 Nut-inch	1	33	M16X50;GB83	螺　钉 Screw	8
5	CDS-40104	手柄座 Lever base	1	34	A8X24;GB119	销 Pins	1
6	CDS-40105	手柄座 Lever base	1	35	A5X24;GB119	销 Pins	1
7	CDS-40107	套 Flang	1	36	4X16;GB1099	键 Key	1
8	CDS-40110	方刀架 Tool post block	1	37	6;GB1155	油　杯 Nipple	2
9	CDS-40111	镶　条 Gib	1	38	10;GB1155	油　杯 Nipple	2
10	CDS-40701	手　柄 Rein	2	39	0.5X5X13;GB2089	弹　簧 Spring	3
11	CDS-40702	垫 Washer	1	40	6;GB308-64	钢　球 Steel ball	3
12	CDS-40703	手柄杆 Lever	1	41	18;GB308-64	钢　球 Steel ball	1
13	CDS-40704	手　柄 Rein	1				
14	CDS-40705	刻度环 Index ring metric	1				
	CDS-40721	刻度环 Index ring inch	1				
15	CDS-40706	公制螺杆 Leadscrew-M	1				
	CDS-40707	英制螺杆 Leadscrew-In	1				
16	CDS-40708	方刀架 Square tool post	1				
17	CDS-40709	弹　簧 Spring	1				
18	CDS-40710	垫　圈 Graduated ring	4				
19	CDS-40711	定位套 Pilot sleeve	4				
20	CDS-40712	镶条螺钉 Gib bolt	2				
21	CDS-40713	定位销 Pin/dowel	1				
22	CDS-40714	歪轮 Ratchet	1				
23	CDS-40715	弹　簧 Spring	1				
24	CDS-40716	啮合器 Coupler	1				
25	CDS-40717	垫　圈 Washer	1				
26	CDS-40718	套　筒 Sleeve	1				
27	CDS-40719	弹　簧 Spring	1				
28	CDS-40720	刀架螺钉 Tool post stud	1				

快换刀架 QCT Posts THE USA STYLE

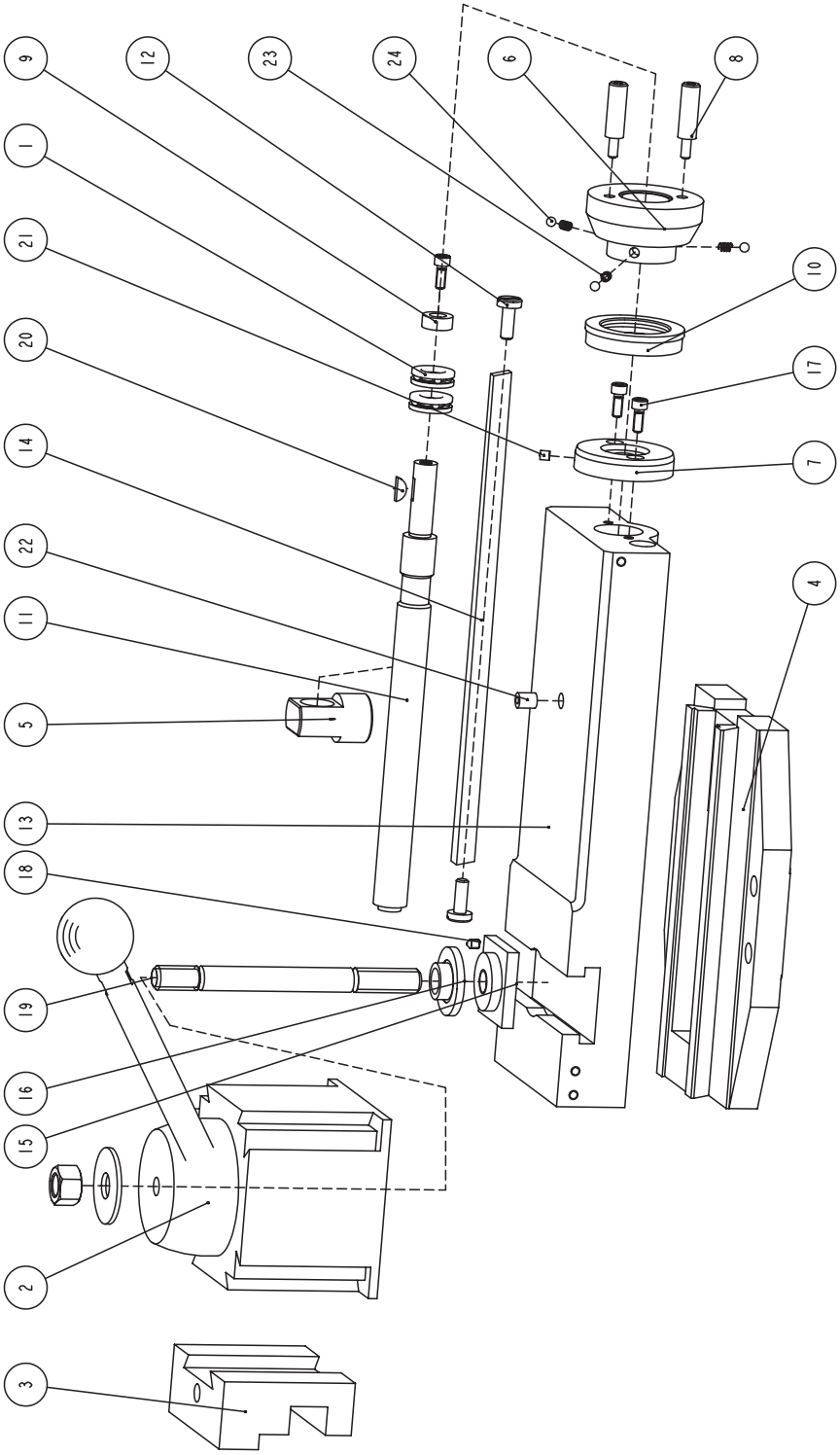

快换刀架 QCT Posts THE USA STYLE

序号 Item	零件编号 Part Number	零件名称 Description	数量 Qty
1	51102	轴 承 Bearing	2
2	250-400	快换刀架体 QCT Master	1
3	250-401 etc.	车削刀夹 Tool holders	
4	CDS-40102	转 盘 Base	1
5	CDS-40103	公制螺母 Nut-metric	1
	CDS-40106	英制螺母 Nut-inch	1
6	CDS-40105	手柄座 Lever base	1
7	CDS-40107	套 Flang	1
8	CDS-40701	手 柄 Rein	2
9	CDS-40702	垫 Washer	1
10	CDS-40705	刻度环Index ring metric	1
	CDS-40721	刻度环Index ring inch	1
11	CDS-40706	公制螺杆Leadscrew-M	1
	CDS-40707	英制螺杆Leadscrew-In	1
12	CDS-40712	镶条螺钉 Gib bolt	2
13	CDS-41101	小刀架 Top slid	1
14	CDS-41102	镶 条 Gib	1
15	CDS-41701	螺 母 Nut	1
16	CDS-41702	垫 T block	1
17	M6X16;GB70	螺 钉 Screw	3
18	M6X8;GB71	螺 钉 Screw	1
19	AM16X150;GB900	螺 柱 Stud	1
20	4X16;GB1099	键 Key	1
21	6;GB1155	油 杯 Nipple	1
22	10;GB1155	油 杯 Nipple	1
23	0.5X5X13;GB2089	弹 簧 Spring	3
24	6;GB308-64	钢 球 Steel ball	3

快换刀架 QCT Posts DEUTSCHLAND STYLE

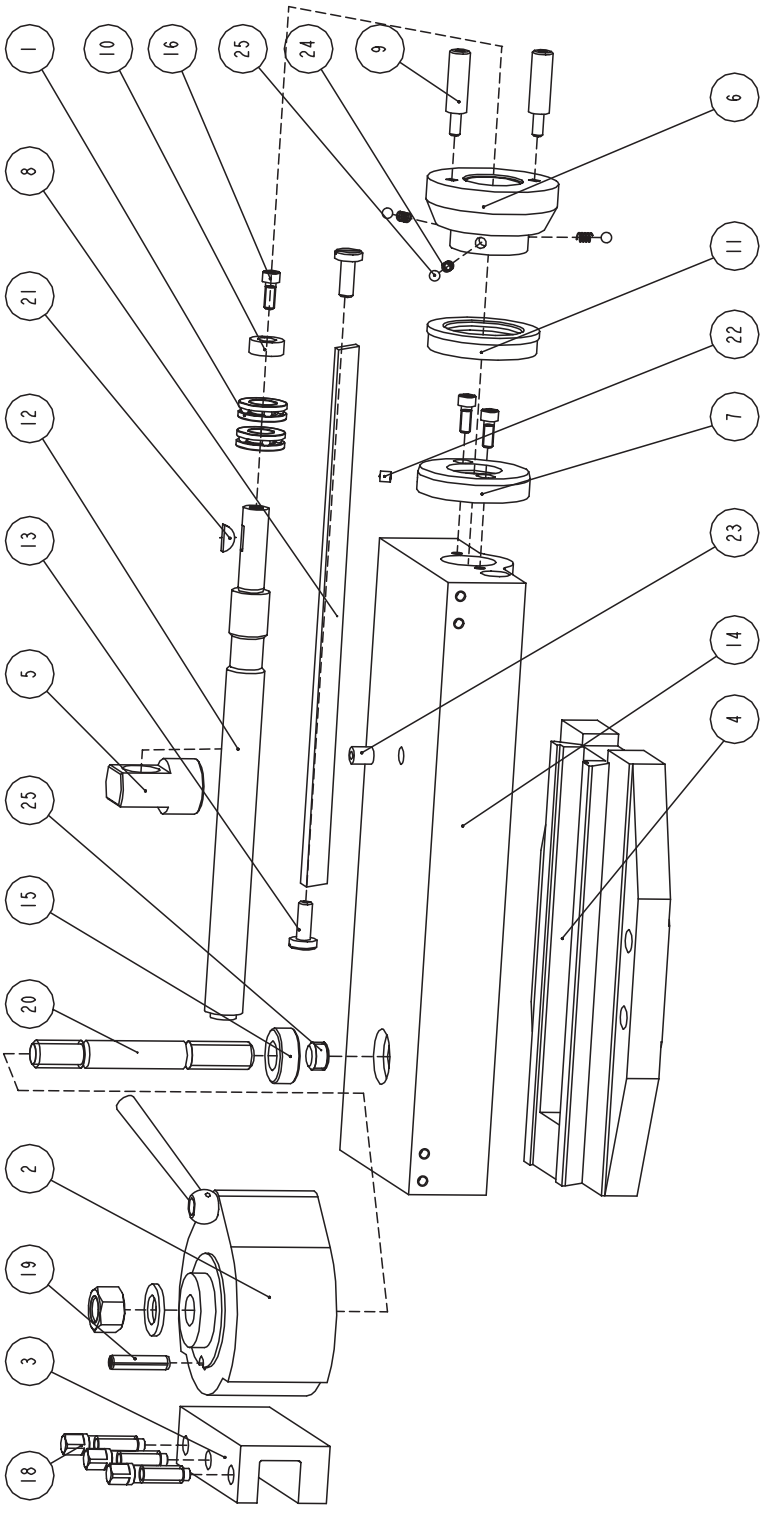

快换刀架 QCT Posts DEUTSCHLAND STYLE

序号 Item	零件编号 Part Number	零件名称 Description	数量 Qty
1	51102	轴 承 Bearing	2
2	540-300	B2型快换刀架体 QCT Master	1
3	540-320 etc.	B型 刀夹 Tool holders	
4	CDS-40102	转 盘 Base	1
5	CDS-40103	公制螺母 Nut-metric	1
	CDS-40106	英制螺母 Nut-inch	1
6	CDS-40105	手柄座 Lever base	1
7	CDS-40107	套 Flang	1
8	CDS-40111	镶 条 Gib	1
9	CDS-40701	手 柄 Rein	2
10	CDS-40702	垫 Graduated	1
11	CDS-40705	刻度环Index ring metric	1
	CDS-40721	刻度环Index ring inch	1
12	CDS-40706	公制螺杆Leadscrew-M	1
	CDS-40707	英制螺杆Leadscrew-In	1
13	CDS-40712	镶条螺钉 Gib bolt	2
14	CDS-A41101	小刀架 Top slid	1
15	CDS-A41702	套 Flang	1
16	M6X16;GB70	螺 钉 Screw	3
17	M16X10;GB77	螺 钉 Screw	1
18	M10X35;GB83	螺 钉 Screw	3
19	B 8X35;GB120	销 Pin	1
20	A M16X100;GB900	螺 柱 Stud	1
21	4X16;GB1099	键 Key	1
22	6;GB1155	油 杯 Nipple	1
23	10;GB1155	油 杯 Nipple	1
24	0.5X5X13;GB2089	弹 簧 Spring	3
25	6;GB308-64	钢 球 Steel ball	3

快换刀架 QCT Posts ITALY STYLE

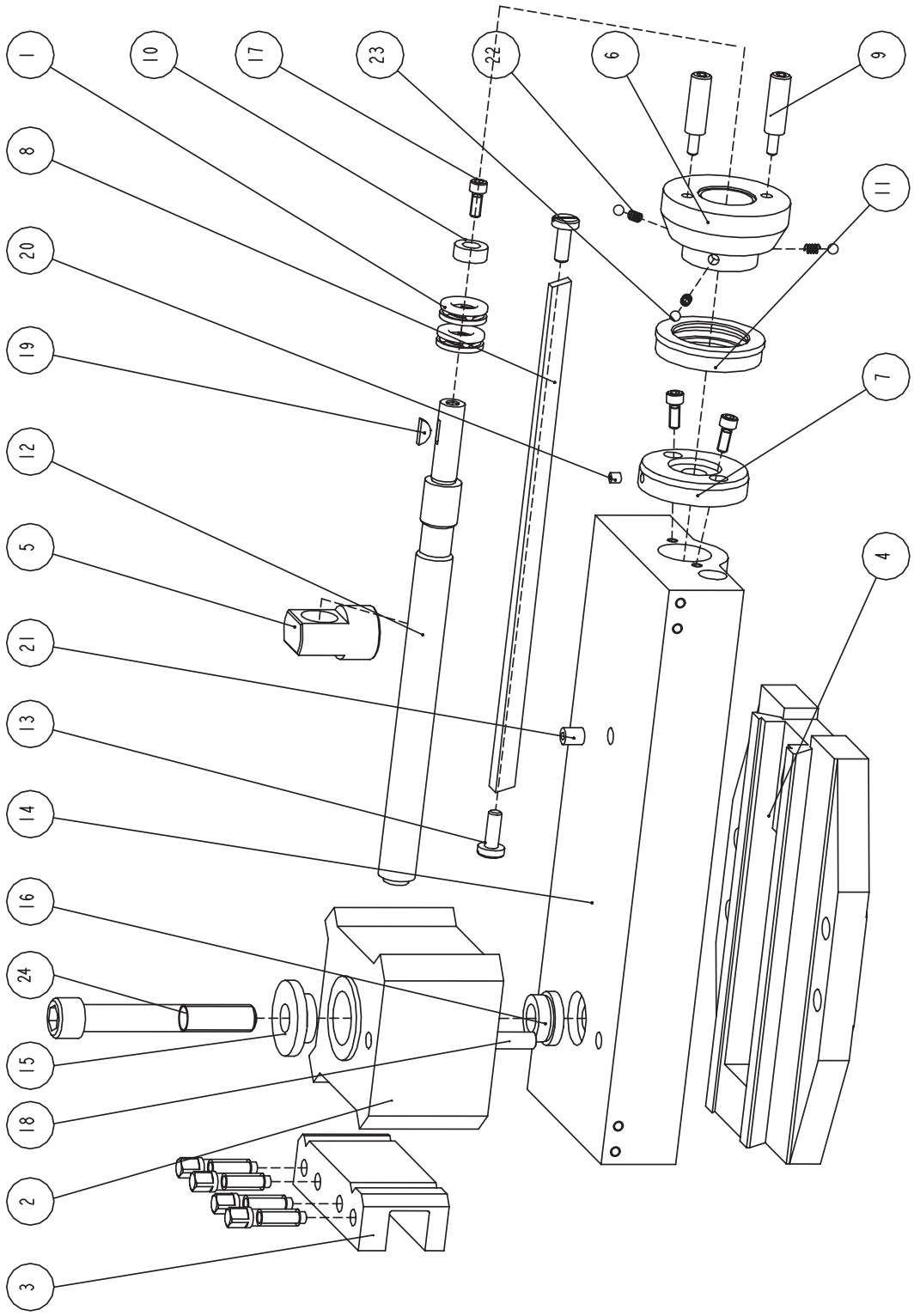

快换刀架 QCT Posts ITALY STYLE

序号 Item	零件编号 Part Number	零件名称 Description	数量 Qty
1	51102	轴 承 Bearing	2
2	501-BR-BP	快换刀架 QCT Master	1
3	502-BR-BP,etc.	刀夹 Tool holders	
4	CDS-40102	转 盘 Base	1
5	CDS-40103	公制螺母 Nut-metric	1
	CDS-40106	英制螺母 Nut-inch	1
6	CDS-40105	手柄座 Lever base	1
7	CDS-40107	套 Flang	1
8	CDS-40111	镶 条 Gib	1
9	CDS-40701	手 柄 Rein	2
10	CDS-40702	垫 Graduated	1
11	CDS-40705	刻度环Index ring metric	1
	CDS-40721	刻度环Index ring inch	1
12	CDS-40706	公制螺杆Leadscrew-M	1
	CDS-40707	英制螺杆Leadscrew-In	1
13	CDS-40712	镶条螺钉 Gib bolt	2
14	CDS-B41101	小刀架 Top slid	1
15	CDS-B41701	套 Flang	1
16	CDS-B41702	套 Flang	1
17	M6X16;GB70	螺 钉 Screw	3
18	A10X95;GB119	销 Screw	1
19	4X16;GB1099	键 Key	1
20	6;GB1155	油 杯 Nipple	1
21	10;GB1155	油 杯 Nipple	1
22	0.5X5X13;GB2089	弹 簧 Spring	3
23	6;GB308-64	钢 球 Steel ball	3
24	M16X110;GB70	螺 钉 Screw	1

床 鞍 SADDLE

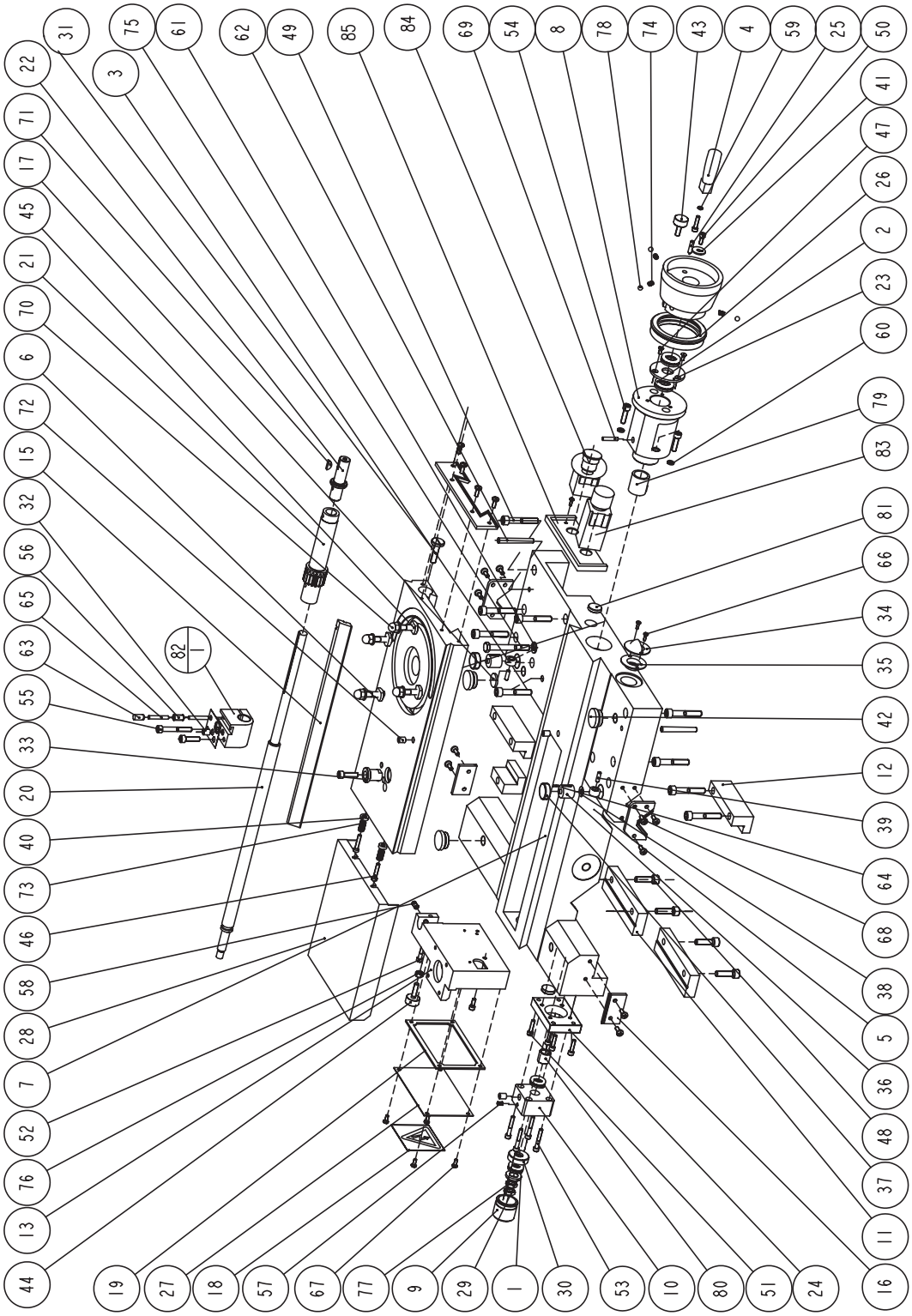
31 75 61 62 49 85 84 69 54 8 78 74 43 4 59 25 50
3 22 71 17 45 21 70 6 72 15 32 56 65 63 55 33 20 40 73 46 58 28 7 52 76 13 44
41 47 26 2 23 60 79 83 81 66 34 35 42 12 39 64 68 38 5 36 48 37 11 16
82/1
19 27 18 57 67 77 9 29 1 30 53 10 80 51 24

床 鞍 SADDLE

序号 Item	零件编号 Part Number	零件名称 Description	数量 Qty	序号 Item	零件编号 Part Number	零件名称 Description	数量 Qty
1	51102	轴 承 BEARING	2	30	CDS-45714	轴承垫 BEARING SHIM	1
2	51104	轴 承 BEARING	2	31	CDS-45715	镶条螺钉	1
3	10X22X13;NA4900	轴 承 BEARING	2	32	CDS-45717	调整垫 CLAMP	1
4	63,Q7317-2-85	折叠手柄 PUCKER HADDLE	1	33	CDS-45719	固定套 SET BUSH	1
	GN 598.7-KU-23	安全手柄 SAFTY HADDLE	1	34	CDS-45721	灯 座 LAMP HOLDER	1
5	CDS-45101	床 鞍 SADDLE	1	35	CDS-45722	灯 座 LAMP HOLDER	1
6	CDS-45102	下滑板 CROSS SLIDE	1	36	CDS-45723	螺 堵 PLUG	2
7	CDS-45103	套 BUSH	1	37	CDS-45724	螺 堵 PLUG	2
8	CDS-45104	法兰盘 FLANGE TRAY	1	38	CDS-45725	蝶型弹簧WING SPRING	1
9	CDS-45107	盖 CASING	1	39	CDS-45726	销 PINS	2
10	CDS-45108	后法兰盘Rear end cover	1	40	CDS-45727	弹簧套 SPRING COVER	2
11	CDS-45109	压 板 CLAMP	2	41	CDS-45729	垫 圈 WASHER	1
12	CDS-45110	压 板 CLAMP	2	42	CDS-45730	油 塞 BEARING	3
13	CDS-45111	分线盒 JUNCTION BOX	1	43	M8X25;DB1017	螺 钉 SCREW	1
14	CDS-45112	固定压板SADDLE CLAMP	1	44	M8X30;DB1017	螺 钉 SCREW	1
15	CDS-45114	镶 条 STRIP	1	45	M10X40;GB37	螺 栓 BOLT	4
16	CDS-45501	刮屑板 WIPER	2	46	M6X30;GB65	螺 钉 SCREW	2
17	CDS-45504	毛 毡 trichome	2	47	M5X12;GB68	螺 钉 SCREW	3
18	CDS-45505	警示标牌 CAUTION SCUTCHEON	1	48	M10X35;GB70	螺 钉 SCREW	4
19	CDS-45507	垫 板 GASKET	1	49	M10X60;GB70	螺 钉 SCREW	9
20	CDS-45701	丝 杠 LEAD SCREW METRIC	1	50	M6X16;GB70	螺 钉 SCREW	2
	CDS-45702	丝 杠 LEAD SCREW INCH	1	51	M6X25;GB70	螺 钉 SCREW	5
21	CDS-45703	齿轮轴 ø400~560 mm GEAR PINION	1	52	M6X35;GB70	螺 钉 SCREW	1
	CDS-45707	齿轮轴 ø660~760 mm GEAR PINION	1	53	M6X40;GB70	螺 钉 SCREW	4
22	CDS-45704	轴 SHAFT	1	54	M8X30;GB70	螺 钉 SCREW	4
23	CDS-45705	轴承垫 BEARING SHIM	1	55	M8X60;GB70	螺 钉 SCREW	1
24	CDS-45706	垫 板 BRACKET	1	56	M10X20;GB77	螺 钉 SCREW	1
25	CDS-45709	柱 STUD	1	57	M6X10;GB77	螺 钉 SCREW	1
26	CDS-45710	刻度环 INDEX RING METRIC	1	58	M8X16;GB77	螺 钉 SCREW	1
	CDS-45731	刻度环 INDEX RING INCH	1	59	6;GB93	垫 圈BACKING RING	1
27	CDS-45711	盖 板 COVER	1	60	8;GB93	垫 圈BACKING RING	2
28	CDS-45712	保护盖 BEARING	1	61	10-Zn;GB97.1	垫 圈BACKING RING	5
29	CDS-45713	轴承垫 BEARING SHIM	1	62	A8X70;GB118	销 PINS	2

床　鞍　SADDLE

序号 Item	零件编号 Part Number	零件名称 Description	数量 Qty
63	A10X20;GB119	销 PINS	1
64	A3X10;GB119	销 PINS	2
65	A6X40;GB119	销 PINS	2
66	M4X12;GB818	螺　钉 SCREW	2
67	M5X12-Zn;DB818	螺　钉 SCREW	4
68	M6X16;GB818	螺　钉 SCREW	14
69	6X30;GB879	销 PINS	1
70	M10;GB923	螺　母 NUT	4
71	5X19;GB1099	键 DRIVING MEDIUM	1
72	10;GB1155	油　杯 NIPPLE	5
73	1.6X9X30;GB2089	弹　簧 SPRING	2
74	1X6X15;GB2089	弹　簧 SPRING	3
75	M10X80-Zn;GB5782	螺　栓 BOLT	1
76	M8;GB6170	螺　母 NUT	1
77	M12-Zn;GB6172	螺　母 NUT	2
78	8;GB308-64	钢　球 STEEL BALL	3
79	B32n6X35;Q41-1	轴　套 SLEEVE	2
80	15X20;Q43-1	隔　套 SPACE	1
81	25n6;Q56-1	堵 PLUG	2
82	CDS-45301	公制螺母 Nut-metric	1
	CDS-45302	英制螺母 Nut-inch	1
83	LA89J-11-22W	按钮 PLUG	1
84	LA89J-11ZS/2-22R	按钮 PLUG	1
85	CDS-30509	面板 PLATE	1

车锥装置 TAPER TURNNING ACCESSRIES

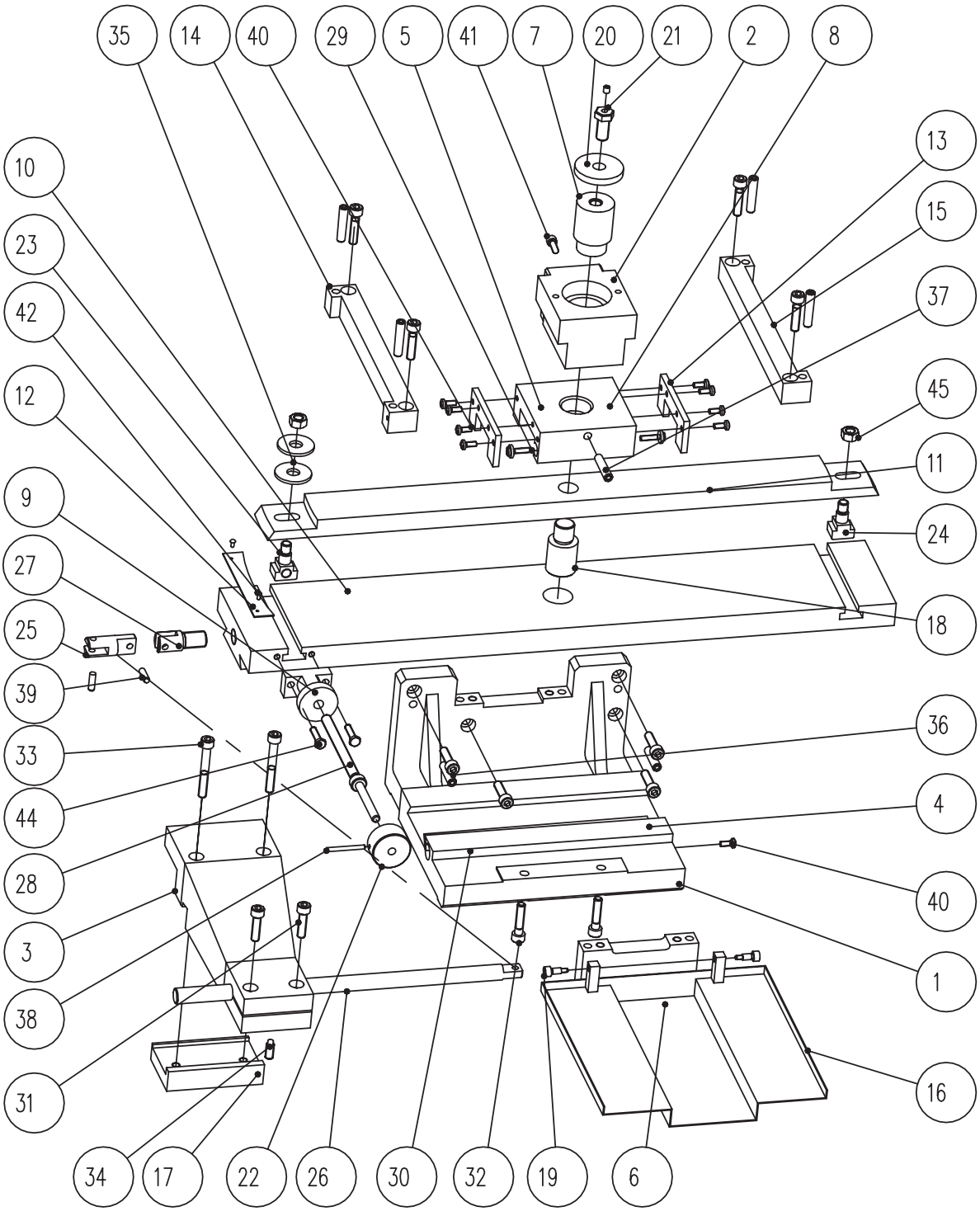

车锥装置 TAPER TURNNING ACCESSRIES

序号 Item	零件编号 Part Number	零件名称 Description	数量 Qty	序号 Item	零件编号 Part Number	零件名称 Description	数量 Qty
1	CDS-48101	座体 Base body	1	30	M6X25; DB1015	螺 钉 Screw	2
2	CDS-48102	滑座 Slide base	1	31	M8X30; GB70	螺 钉 Screw	6
3	CDS-48103	支座 Bracket	1	32	M8X35; GB70	螺 钉 Screw	6
4	CDS-48104	镶条 Built-in bar	1	33	M8X60; GB70	螺 钉 Screw	2
5	CDS-48105	镶条 Built-in bar	1	34	M8X20; GB79	螺 钉 Screw	1
6	CDS-48106	支板 Bracket	1	35	12-Zn; GB96	垫 圈 Washer	2
7	CDS-48107	转轴 Axis of rotation	1	36	A 8X35; GB118	销 Pins	2
8	CDS-48108	导轨座 Lead-track base	1	37	A 8X40; GB118	销 Pins	5
9	CDS-48109	手柄座 Lever base	1	38	A 4X40; GB119	销 Pins	1
10	CDS-48110	滑动板 Slide plate	1	39	A 6X20; GB119	销 Pins	2
11	CDS-48111	导轨板 Lead-track plate	1	40	M5X12; GB818	螺 钉 Screw	9
12	CDS-48301	标牌 Scutcheon	1	41	M6X40; GB70	螺 钉 Screw	1
13	CDS-48501	除尘板 Dustproof plate	2	42	3X6-T3;GB867	铆 钉 Rivet	2
14	CDS-48701	导轨 Lead-track	1	43	6; GB1155	油 杯 Nipple	1
15	CDS-48702	导轨 Lead-track	1	44	M6X25;GB5783	螺 栓 Bolt	2
16	CDS-48703	罩(焊接件) Cover	1	45	M10; GB6170	螺 母 Nut	2
17	CDS-48704	托板 Splint	1				
18	CDS-48705	转轴 Axis of rotation	1				
19	CDS-48706	销 Pins	2				
20	CDS-48707	垫 Washer	1				
21	CDS-48708	螺钉 Screw	1				
22	CDS-48709	刻度环 Index ring	1				
23	CDS-48710	滑座 Slide base	1				
24	CDS-48711	滑座 Slide base	1				
25	CDS-48712	万向连接头 Adaptor	1				
26	CDS-48713	连接杆 Lever	1				
27	CDS-48714	螺钉头 Screw head	1				
28	CDS-48715	丝杠 Lead screw	1				
29	M5X20; DB1015	螺 钉 Screw	2				

手动泵 MANUAL PUMP

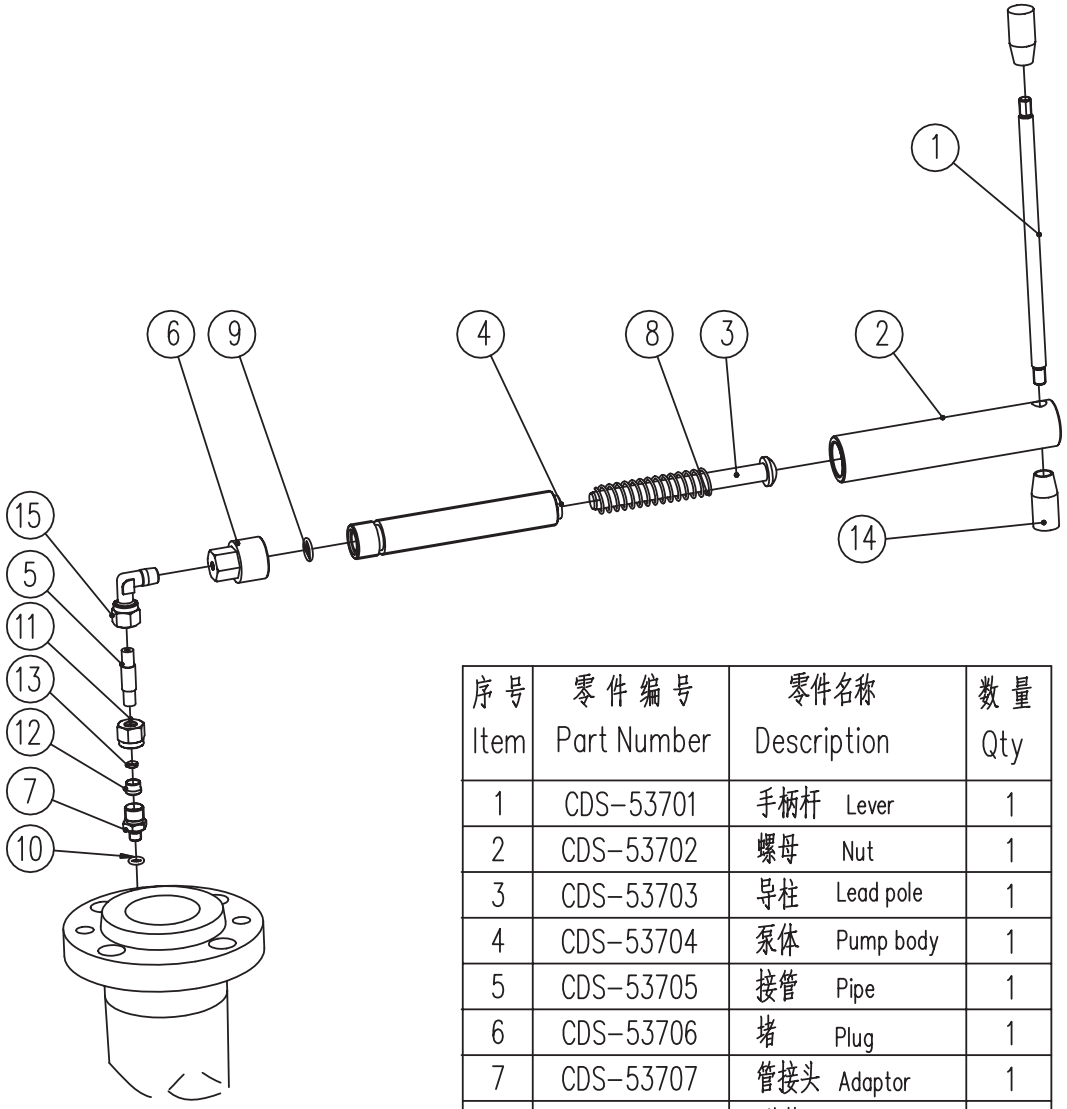

序号 Item	零件编号 Part Number	零件名称 Description	数量 Qty
1	CDS-53701	手柄杆 Lever	1
2	CDS-53702	螺母 Nut	1
3	CDS-53703	导柱 Lead pole	1
4	CDS-53704	泵体 Pump body	1
5	CDS-53705	接管 Pipe	1
6	CDS-53706	堵 Plug	1
7	CDS-53707	管接头 Adaptor	1
8	2X22X160; GB2089	弹簧 Spring	1
9	17X2.65; GB3452.1	密封圈 Sealing ring	1
10	9.5X2.65; GB3452.1	密封圈 Sealing ring	1
11	G10; GB3759	螺母 Nut	1
12	10; GB3764	卡套 Block bush	1
13	8; JB982	垫圈 Washer	1
14	M10X50 L3Cr;JB/T7271.5	手柄套 Lever bush	2
15	10-Z1/4; Y83-1	管接头 Adaptor	1

附件及工具 Tools and Accessories

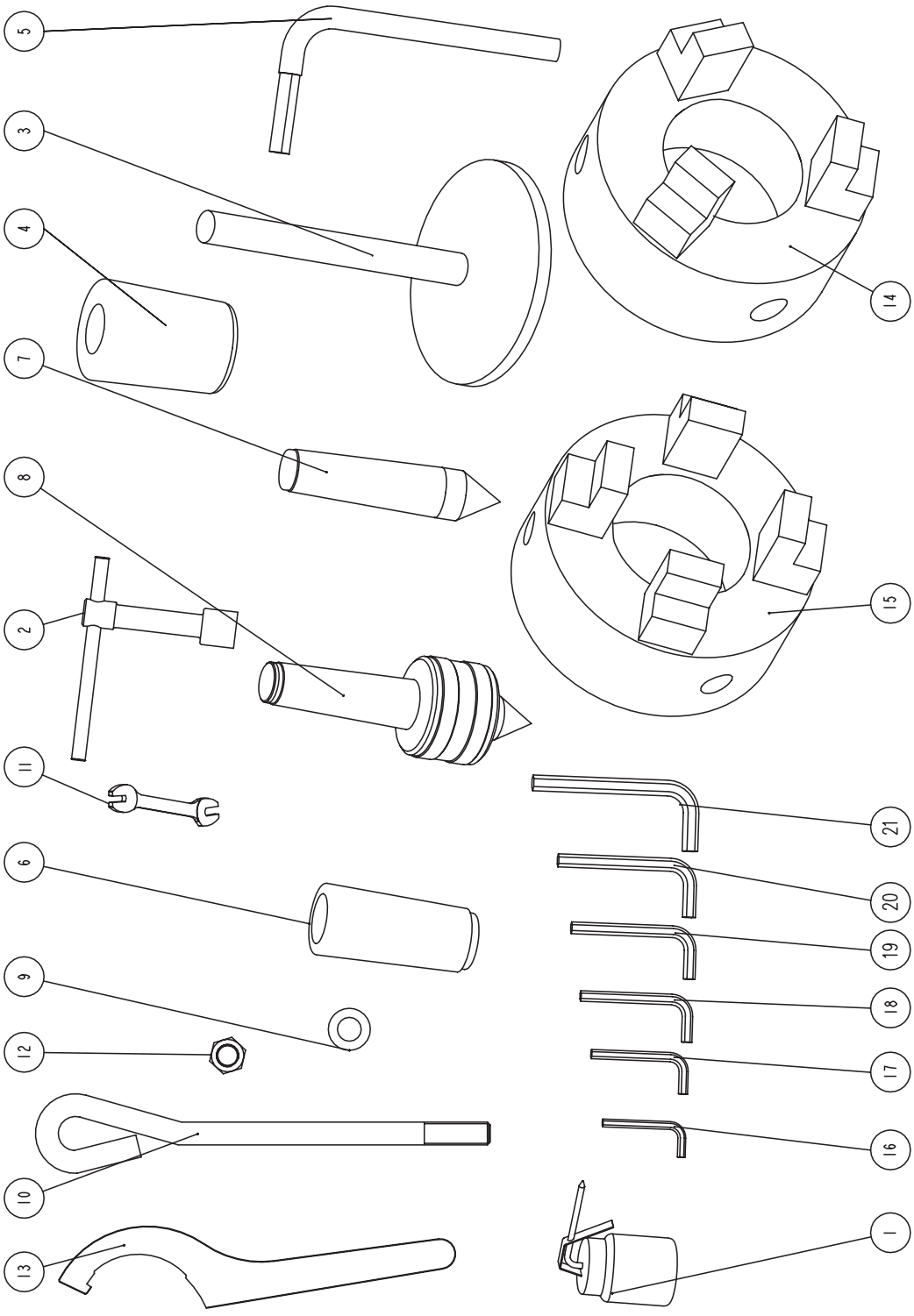

附件及工具 Tools and Accessories

序号 Item	零件编号 Part Number	零件名称 Description	数量 Qty	备注 Remark
1	YQ100	油枪 Pointed nose oil gun	1	
2	17;S912-3A	扳手 Spanner	1	
3	KJZQ-600	机床减震垫 Vibration damping wedge for lathe	6	≤1500mm option
	KJZQ-600		8	≥2000mm option
4	CDS-60701	顶尖套 Center sleeve	1	For dia. 82mm spindle bore
	CDS-60704	顶尖套 Center sleeve	1	For dia. 105mm spindle bore
5	CDS-60702	四方扳手 14mm Key	1	
	CDS-60703	四方扳手 1/2" Key	1	
6	6/5;DB1220	顶尖套 Center sleeve	1	For dia. 52mm spindle bore
7	D115;DB1221	顶尖 Centers	2	莫氏5号 MT No. 5
8	D415;DB1222	活顶尖 Rototing center	1	莫氏5号 MT No. 5 option
9	20;GB97.1	垫圈 Washer	10	≤1500
	20;GB97.1	垫圈 Washer	12	≥2000
10	M20X400;GB799	螺钉 bolts	10	≤1500
	M20X400;GB799	螺钉 bolts	12	≥2000
11	16X17;S91-1A	扳手 Spanner	1	
	18X19;S91-1A	扳手 Spanner	1	
	22X24;S91-1A	扳手 Spanner	1	
	27X30;S91-1A	扳手 Spanner	1	
12	M20;GB6170	螺母 Nut	10	≤1500
	M20;GB6170	螺母 Nut	12	≥2000
13	110~130;JB1019	扳手 Spanner	1	特殊订货 option
14	K11250C/C6	三爪卡盘 3-jaw chuck	1	C6主轴用 C6 spindle
	K11250C/A2-6	三爪卡盘 3-jaw chuck	1	A2-6主轴用(需特殊订货) A2-6 spindle option
	K11250C/D6	三爪卡盘 3-jaw chuck	1	D6主轴用(需特殊订货) D6 spindle option
	K11315C/D6	三爪卡盘 3-jaw chuck	1	D6主轴用(需特殊订货) D6 spindle option
	K11250C/D8	三爪卡盘 3-jaw chuck	1	D8主轴用(CDS6½40B/50B/56B)出口的高速机床用铝盘体; 国内的机床用铸铁盘体
	K11315C/D8	三爪卡盘 3-jaw chuck	1	D8主轴用(CDS6½40C/50C/56C/66C/76C/66B/76B) D8 spindle
	K11400C/D8	三爪卡盘 3-jaw chuck	1	D8主轴用(需特殊订货) D8 spindle option
	K11250C/C8	三爪卡盘 3-jaw chuck	1	(CDS6½40B/50B/56B)C8主轴用,特殊订货 C8 spindle option
	K11315C/C8	三爪卡盘 3-jaw chuck	1	(CDS6½40C/50C/56C/66C/76C/66B/76B)C8主轴用特殊订货 C8 spindle option
	K11400C/C8	三爪卡盘 3-jaw chuck	1	C8主轴用(需特殊订货) C8 spindle option
	K11250C/A2-8	三爪卡盘 3-jaw chuck	1	(CDS6½40B/50B/56B)A2-8主轴用,特殊订货 A2-8 spindle option
	K11315C/A2-8	三爪卡盘 3-jaw chuck	1	A2-8主轴用(CDS6½40C/50C/56C/66C/76C/66B/76B),特殊订货 A2-8 spindle option

附件及工具 Tools and Accessories

序号 Item	零件编号 Part Number	零件名称 Description	数量 Qty	备注 Remark
15	K72315/C6	四爪卡盘 4-jaw chuck	1	C6主轴用(需特殊订货) C6 spindle option
	K72400/C6	四爪卡盘 4-jaw chuck	1	C6主轴用(需特殊订货) C6 spindle option
	K72315/A2-6	四爪卡盘 4-jaw chuck	1	A2-6主轴用(需特殊订货) A2-6 spindle option
	K72315/D6	四爪卡盘 4-jaw chuck	1	D6主轴用(需特殊订货) D6 spindle option
	K72315/D8	四爪卡盘 4-jaw chuck	1	(CDS6$\frac{1}{2}$40B/50B/56B)D8主轴用 D8 spindle
	K72400/D8	四爪卡盘 4-jaw chuck	1	(CDS6$\frac{1}{2}$40C/50C/56C/66C/76C/66B/76B)D8主轴用 D8 spindle
	K72315/C8	四爪卡盘 4-jaw chuck	1	(CDS6$\frac{1}{2}$40B/50B/56B)C8主轴用 C8 spindle
	K72400/C8	四爪卡盘 4-jaw chuck	1	(CDS6$\frac{1}{2}$40C/50C/56C/66C/76C/66B/76B)C8主轴用,特殊订货 C8 spindle option
	K72315/A2-8	四爪卡盘 4-jaw chuck	1	(CDS6$\frac{1}{2}$40B/50B/56B)A2-8主轴用,特殊订货 option
	K72315/A2-8	四爪卡盘 4-jaw chuck	1	(CDS6$\frac{1}{2}$40C/50C/56C/66C/76C/66B/76B)A2-8主轴用,特殊订货 option
16	3;GB5356	扳手 Allen key	1	
17	4;GB5356	扳手 Allen key	1	
18	5;GB5356	扳手 Allen key	1	
19	6;GB5356	扳手 Allen key	1	
20	8;GB5356	扳手 Allen key	1	
21	10;GB5356	扳手 Allen key	1	

拨 盘
DRIVE PLATE

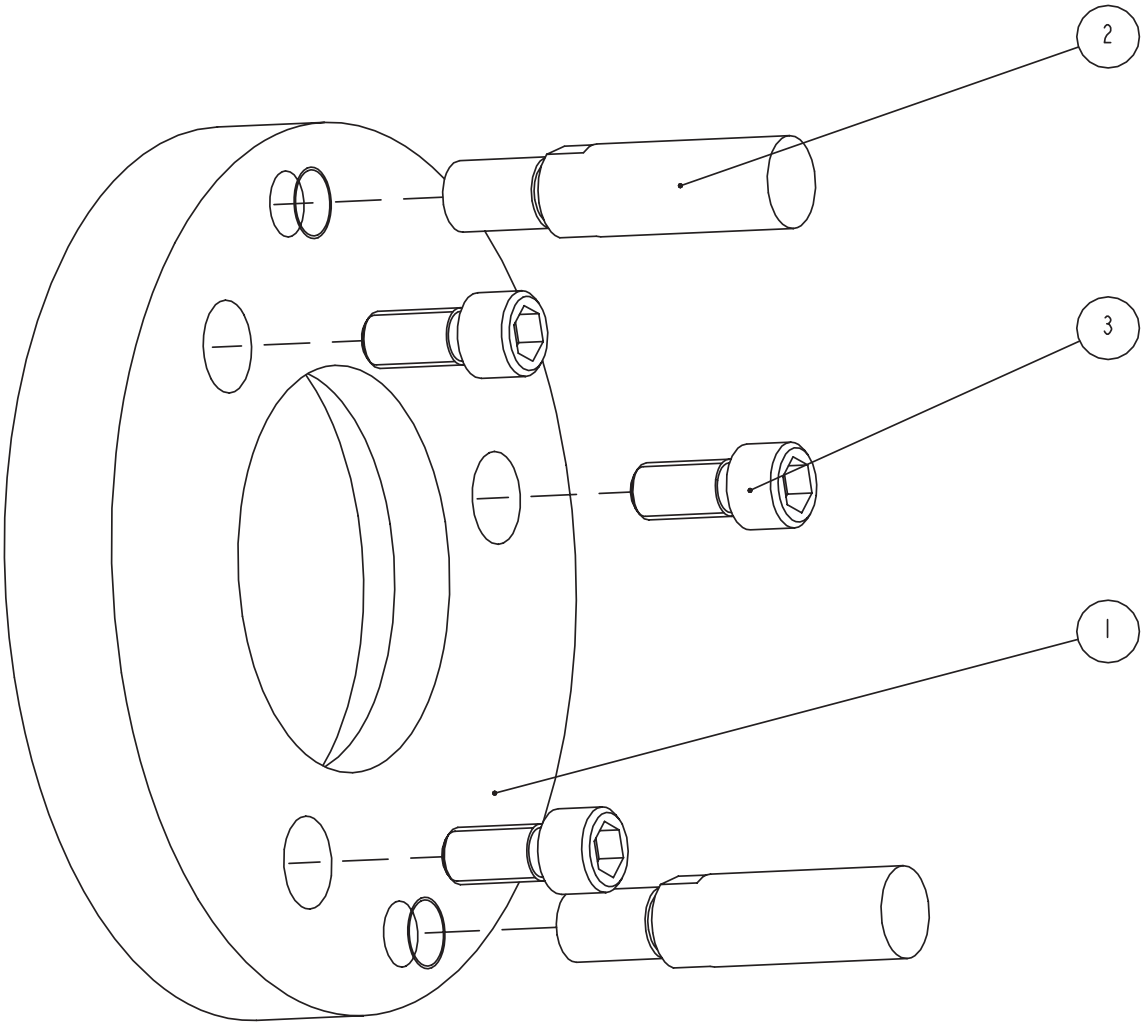

拨 盘

DRIVE PLATE

序号 Item	零件编号 Part Number	零件名称 Description	数量 Qty	备 注 Remark	
1	CDS-62103-A6	拨 盘 Drive plate	1	A2-6主轴用	A2-6 nose
	CDS-62113-A8	拨 盘 Drive plate	1	A2-8主轴用	A2-8 nose
2	CDS-62701	拨 杆 Drive rod	2		
3	M12X40;GB70	螺 钉 Screw	3	A2-6主轴用	A2-6 nose
	M16X35;GB70	螺 钉 Screw	3	A2-8主轴用	A2-8 nose

拨 盘
DRIVE PLATE

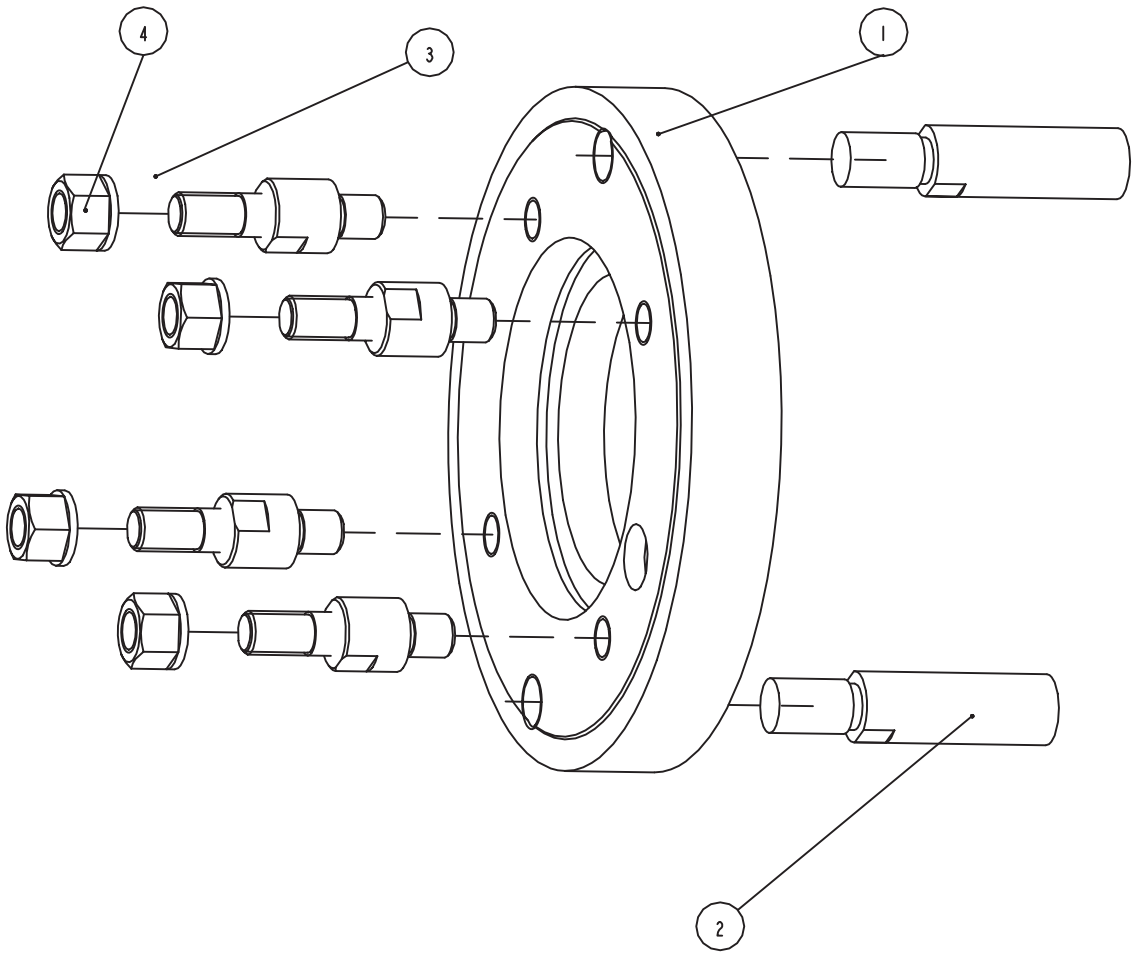

拨 盘

DRIVE PLATE

序号 Item	零件编号 Part Number	零件名称 Description	数量 Qty	备 注 Remark
1	CDS-62102-C6	拨 盘 Drive plate	1	C6主轴用 C6 nose
	CDS-62112-C8	拨 盘 Drive plate	1	C8主轴用 C8 nose
2	CDS-62701	拨 杆 Drive rod	2	
3	6;GB1452	螺 栓 Bolt	4	C6主轴用 C6 nose
	8;GB1452	螺 栓 Bolt	4	C8主轴用 C8 nose
4	6;GB1453	螺 钉 Screw	4	C6主轴用 C6 nose
	8;GB1453	螺 钉 Screw	4	C8主轴用 C8 nose

拨 盘
DRIVE PLATE

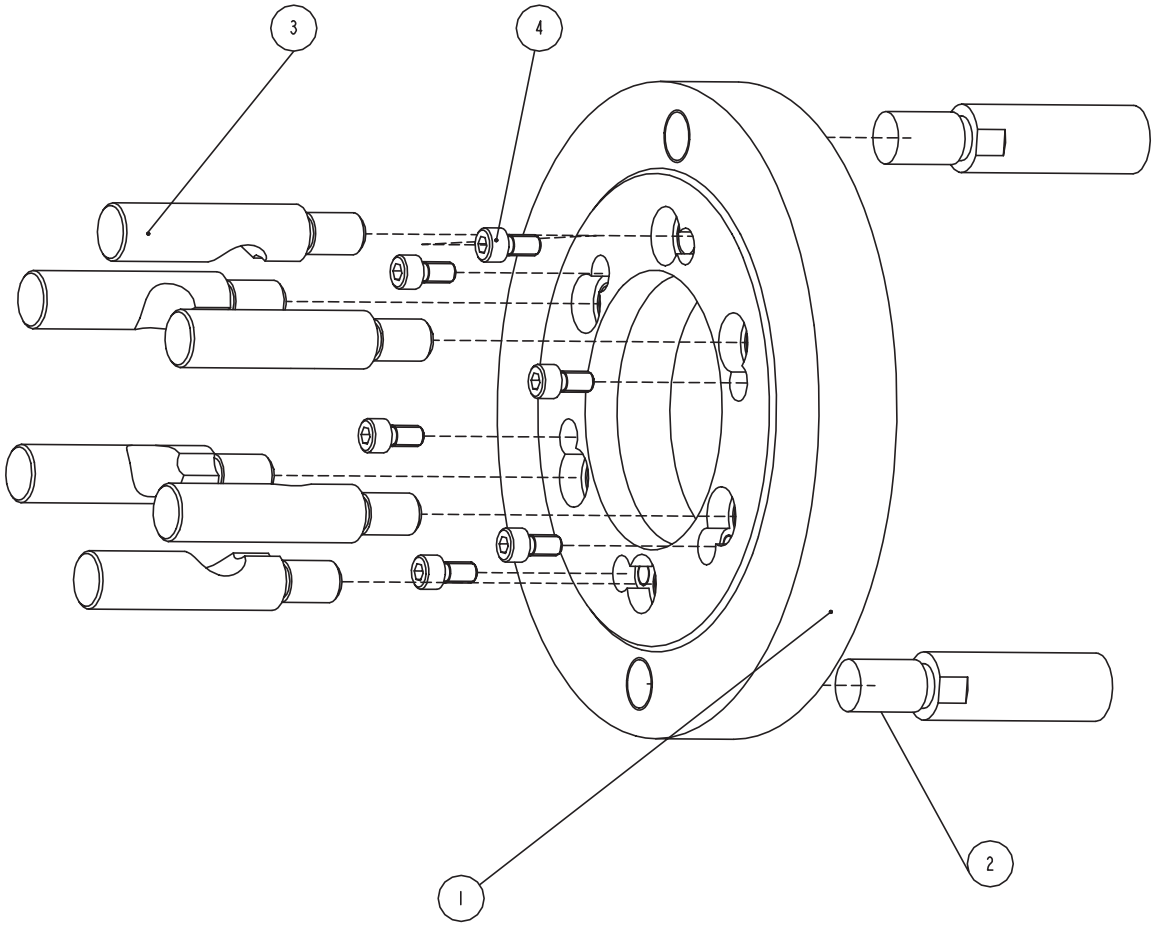

拨 盘
DRIVE PLATE

序号 Item	零件编号 Part Number	零件名称 Description	数量 Qty	备 注 Remark
1	CDS-62101-D6	拨 盘 Drive plate	1	D6主轴用 D6 nose
	CDS-62111-D8	拨 盘 Drive plate	1	D8主轴用 D8 nose
2	CDS-62701	拨 杆 Drive rod	2	
3	CDS-62702	拉 杆 draw rod	6	D6主轴用 D6 nose
	CDS-62703	拉 杆 draw rod	6	D8主轴用 D8 nose
4	M8X16;GB70	螺 钉 Screw	6	

平面盘
FACE PLATE

A2-6及A2-8 主轴用　　A2-6 or A2-8 Spindle nose

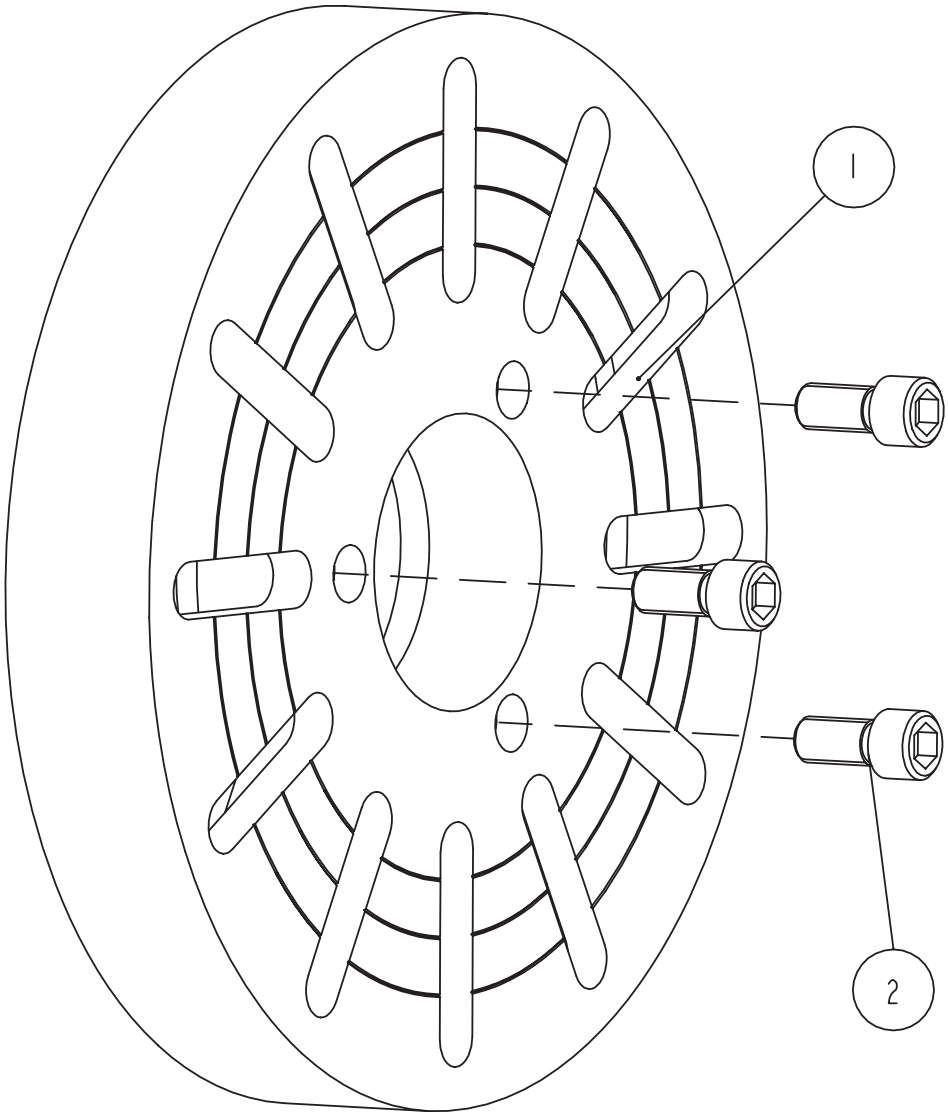

平面盘
FACE PLATE

序号 Item	零件编号 Part Number	零件名称 Aescription	数量 Qty	
1	CDS-63103-A6	平面盘	1	CDS6$\frac{1}{2}$40A A2-6 Spindle nose
	CDS-63106-A6	平面盘	1	CDS6$\frac{1}{2}$50A A2-6 Spindle nose
	CDS-63123-A8	平面盘	1	CDS6$\frac{1}{2}$40B/C A2-8 Spindle nose
	CDS-63126-A8	平面盘	1	CDS6$\frac{1}{2}$50B/C A2-8 Spindle nose
2	M12X40;GB70	螺钉 Screw	3	A2-6 Spindle nose
	M16X35;GB70	螺钉 Screw	3	A2-8 Spindle nose

平面盘
FACE PLATE

C6及C8 主轴用　　C6 or C8 Spindle nose

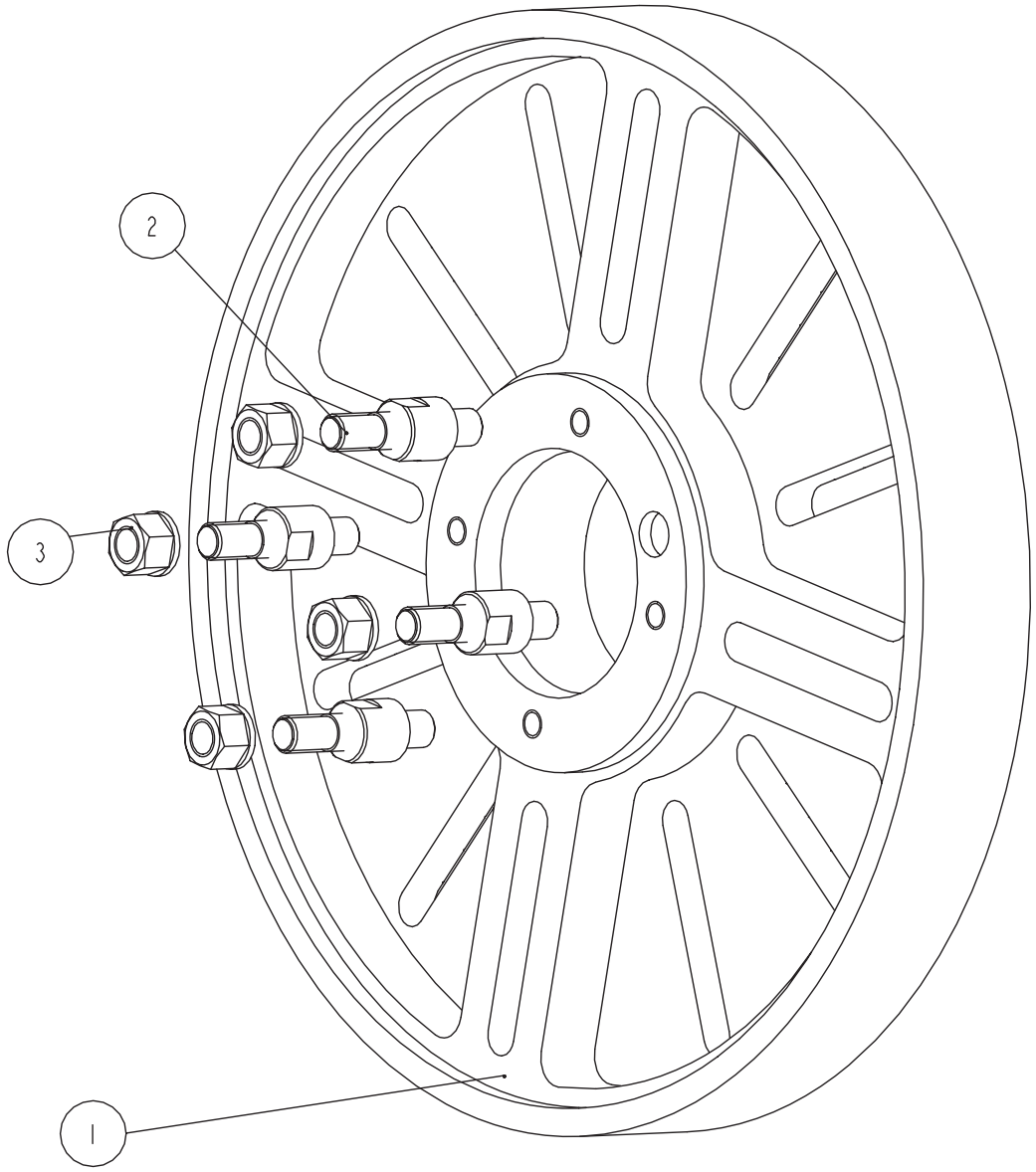

平面盘
FACE PLATE

序号 Item	零件编号 Part Number	零件名称 Cescription	数量 Qty	
1	CDS-63101-C6	平面盘Face plate	1	CDS6$\frac{1}{2}$40A C6 Spindle nose
	CDS-63104-C6	平面盘Face plate	1	CDS6$\frac{1}{2}$50A C6 Spindle nose
	CDS-63110-C6	平面盘Face plate	1	CDS6$\frac{1}{2}$66A C6 Spindle nose
	CDS-63122-C8	平面盘Face plate	1	CDS6$\frac{1}{2}$40B/C C8 Spindle nose
	CDS-63125-C8	平面盘Face plate	1	CDS6$\frac{1}{2}$50B/C C8 Spindle nose
	CDS-63131-C8	平面盘Face plate	1	CDS6$\frac{1}{2}$66B/C C8 Spindle nose
2	6;GB1452	螺栓 Bolt	4	C6 Spindle nose
	8;GB1452	螺栓 Bolt	4	C8 Spindle nose
3	6;GB1453	螺母 Nut	4	C6 Spindle nose
	8;GB1453	螺母 Nut	4	C8 Spindle nose

平面盘
FACE PLATE

D6及D8 主轴用　　D6 or D8 Spindle nose

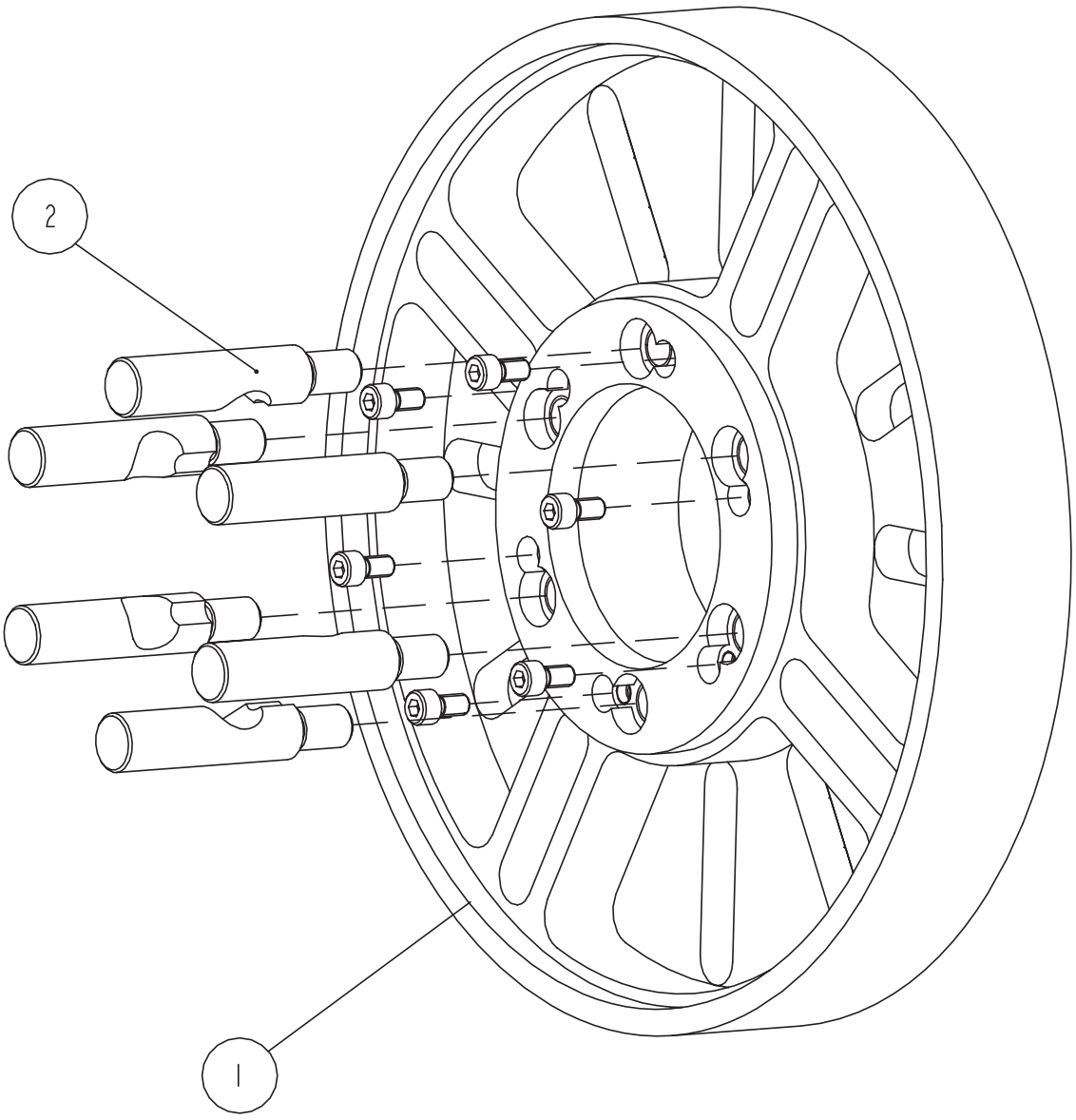

平面盘
FACE PLATE

序号 Item	零件编号 Part Number	零件名称 Description	数量 Qty	
1	CDS-62102-D6	平面盘 Face plate	1	CDS6$\frac{1}{2}$40A D6 Spindle nose
	CDS-62105-D6	平面盘 Face plate	1	CDS6$\frac{1}{2}$50A D6 Spindle nose
	CDS-62121-D8	平面盘 Face plate	1	CDS6$\frac{1}{2}$40B/C D8 Spindle nose
	CDS-62124-D8	平面盘 Face plate	1	CDS6$\frac{1}{2}$50B/C D8 Spindle nose
	CDS-62127-D8	平面盘 Face plate	1	CDS6$\frac{1}{2}$56B/C D8 Spindle nose
	CDS-62130-D8	平面盘 Face plate	1	CDS6$\frac{1}{2}$66B/C D8 Spindle nose
	CDS-62133-D8	平面盘 Face plate	1	CDS6$\frac{1}{2}$76B/C D8 Spindle nose
2	CDS-62702	拉杆 draw rod	6	D6 Spindle nose
	CDS-62703	拉杆 draw rod	6	D8 Spindle nose
3	M8X16;GB70	螺钉 Screw	6	

中心架 STEADY REST

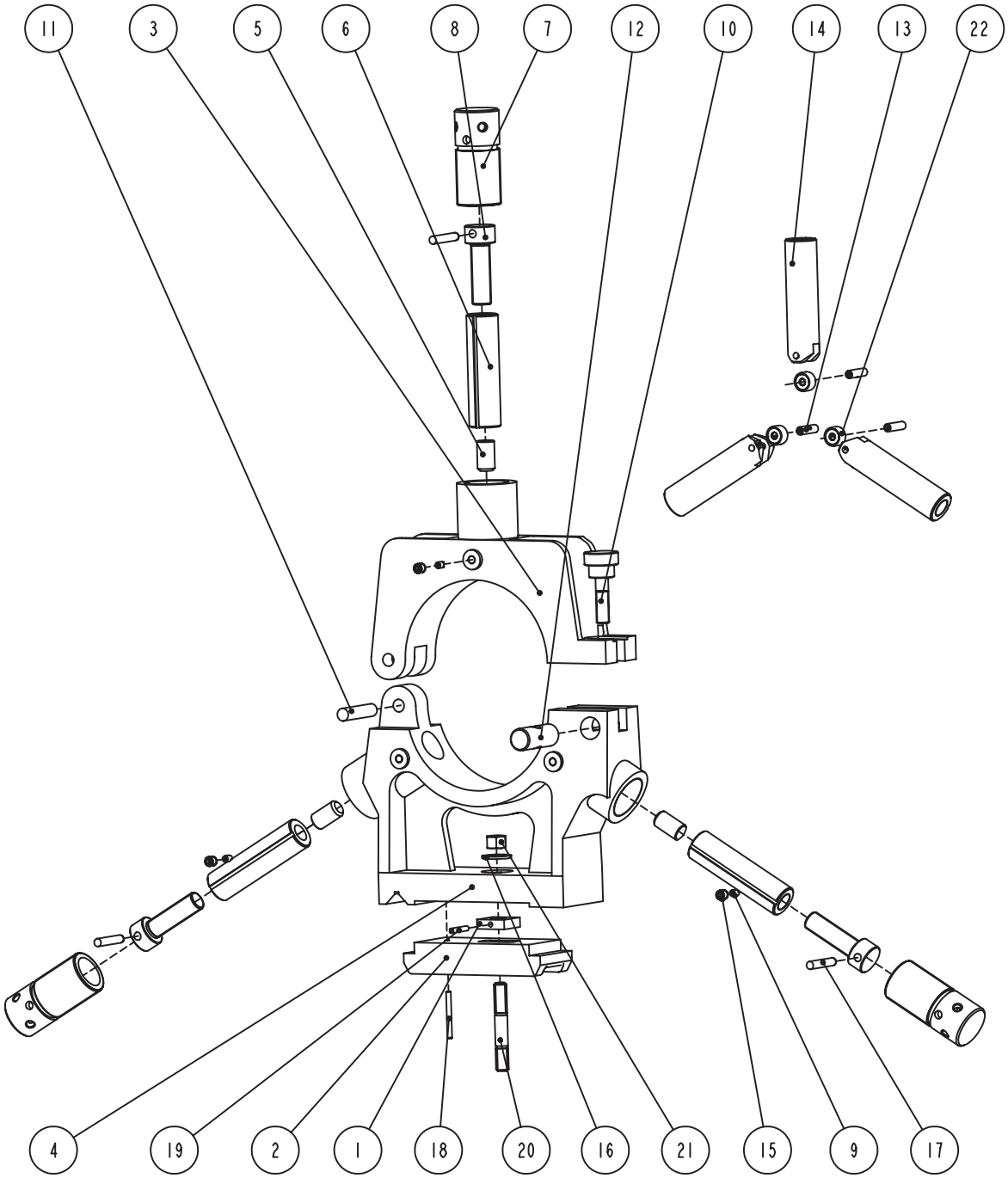

中心架 STEADY REST

序号 Item	零件编号 Part Number	零件名称 Description	数量 Qty	备注 Remark
1	CDS-13103	压板 Clamping plate	1	
2	CDS-13710	板 Plate	1	
3	CDS-64101	中心架上体 Top Body	1	
4	CDS-64102	中心架下体 base body	1	400mm
	CDS-64103	中心架下体 base body	1	500mm
	CDS-64104	中心架下体 base body	1	560mm
	CDS-64105	中心架下体 base body	1	660mm
	CDS-64106	中心架下体 base body	1	760mm
5	CDS-64501	顶轴 Figers	3	
6	CDS-64701	滑套 Sliding bush	3	
7	CDS-64702	旋钮 Knob	3	
8	CDS-64703	螺钉 Screw	3	
9	CDS-64704	挡销 Backing pin	3	
10	CDS-64705	锁紧螺钉 Lock screw	3	
11	CDS-64706	轴 Axes	1	
12	CDS-64707	轴 Axes		
13	CDS-64708	轴 Axes	1	特殊订货(带滚动爪时用) Option roller
14	CDS-64709	滑套 Sliding bush	3	特殊订货(带滚动爪时用) Option roller
15	M812X12;GB77	螺钉 Screw	3	
16	20-Zn;GB97.1	垫圈 Washer	1	
17	A6X60;GB119	销 Pins	1	
18	A10X60;GB119	销 Pins	3	
19	A6X40;GB879	销 Pins	1	
20	A M16X80;GB900	螺柱 Double screw bolt	1	
21	M16;GB6170	螺母 Nut	1	
22	10X30X15;NATR10	支撑滚轮轴承 Bearing	3	特殊订货(带滚动爪时用) Option roller

大孔中心架 BIG HOLE STEADY REST

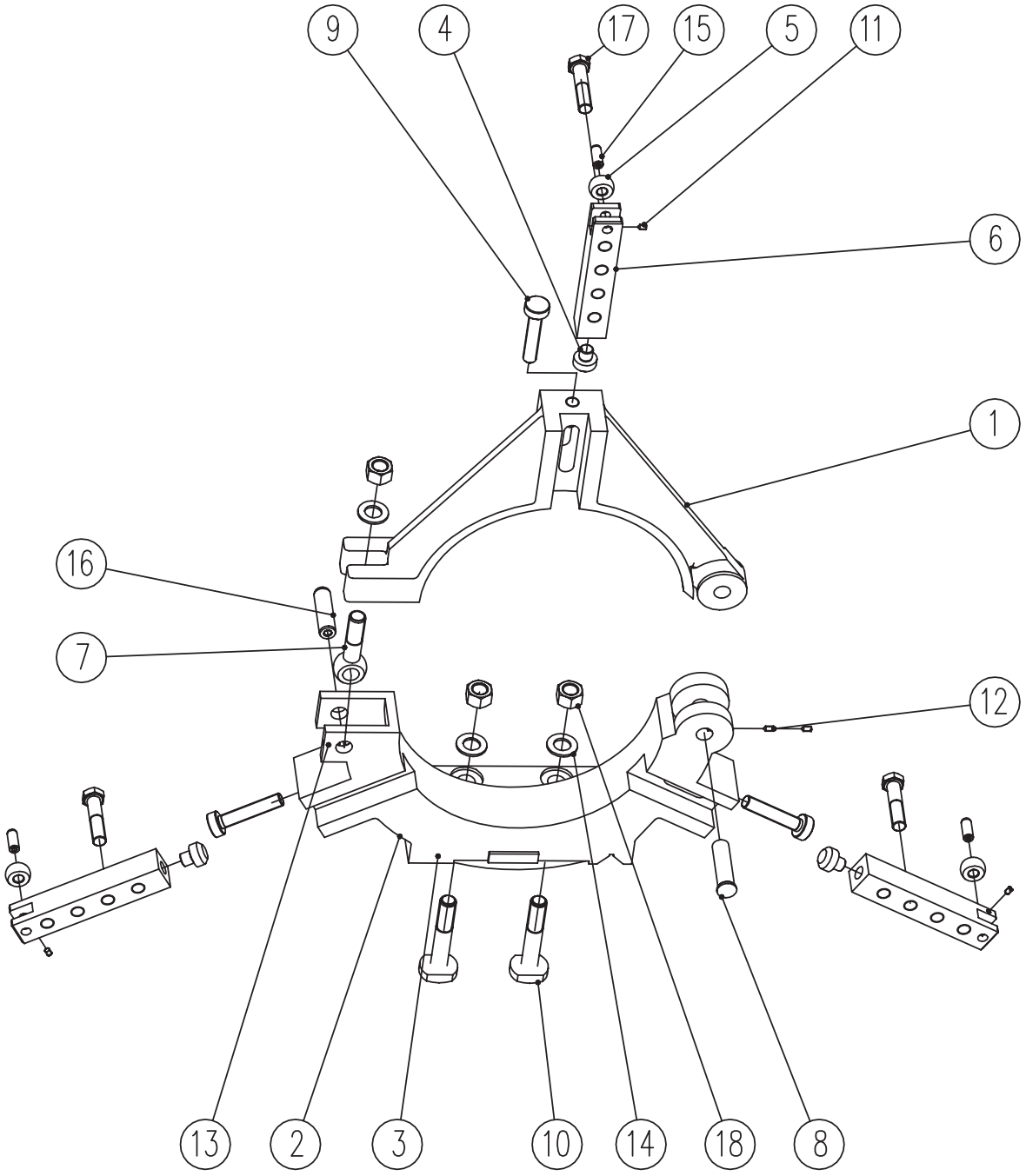

大孔中心架 BIG HOLE STEADY REST

序号 Item	零件编号 Part Number	零件名称 Description	数量 Qty	备注 Remark
1	CDS-A64101	中心架上体 Top Body	1	
2	CDS-A64102	中心架下体 base body	1	400mm
	CDS-A64102	中心架下体 base body	1	500mm
	CDS-A64102	中心架下体 base body	1	560mm
	CDS-A64102	中心架下体 base body	1	660mm
	CDS-A64102	中心架下体 base body	1	760mm
3	CDS-A64107	压板 PUSH	1	
4	CDS-A64108	塞 STEM	3	
5	CDS-A64109	滚子 ROLLER	3	
6	CDS-A64701	滑块 SLIDE BLOCK	3	
7	CDS-A64702	螺 栓 BOLT	1	
8	CDS-A64703	轴 SHAFT	1	
9	CDS-A64704	螺 钉 SCREW	3	
10	M20X110; GB37	螺 栓 BOLT	2	
11	M6X10; GB71	螺 钉 SCREW	3	
12	M6X12; GB71	螺 钉 SCREW	2	
13	M6X16; GB71	螺 钉 SCREW	1	
14	20; GB97.1	垫 圈 WASHER	3	
15	B 12X30; GB120	销 PINS	3	
16	B 20X70; GB120	销 PINS	1	
17	M16X70;GB5782	螺 栓 BOLT	3	
18	M20; GB6170	螺 母 NUT	3	

跟刀架 FOLLOWER REST

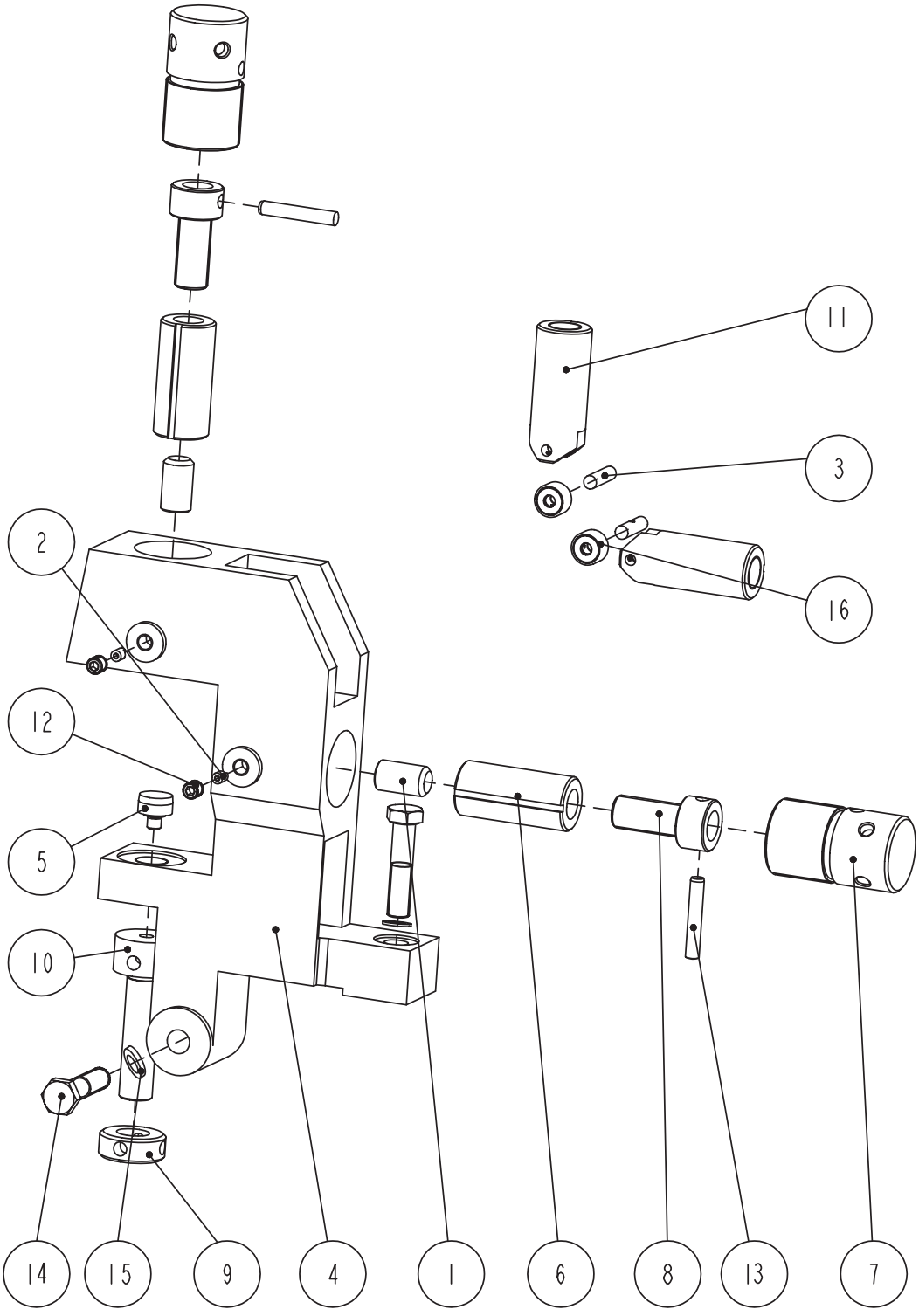

跟刀架 FOLLOWER REST

序号 Item	零件编号 Part Number	零件名称 Description	数量 Qty	备注 Remark
1	CDS-64501	顶 轴 Figer	2	
2	CDS-64704	挡 销 Backing pin	2	
3	CDS-64708	轴 Axes	2	特殊订货(带滚动爪时用) Option roller
4	CDS-64101	跟刀架体 Body	1	400mm
	CDS-64102	跟刀架体 Body	1	500mm
	CDS-64103	跟刀架体 Body	1	560mm
	CDS-64104	跟刀架体 Body	1	660mm
	CDS-64105	跟刀架体 Body	1	760mm
5	CDS-65502	支撑销 Figer	1	
6	CDS-65701	滑 套 Sliding bush	2	
7	CDS-65702	旋 钮 Knob	2	
8	CDS-65703	螺 钉 Screw	2	
9	CDS-65705	螺 母 Nut	1	
10	CDS-65706	螺 杆 Screw	1	
11	CDS-65709	滑 套 Sliding bush	1	特殊订货(带滚动爪时用) Option roller
12	M812X12;GB77	螺 钉 Screw	2	
13	A4X60;GB119	销 Pins	2	
14	M16X70;GB5782	螺 栓 Bolts	2	
15	20-Zn;GB97.1	垫 圈 Washer	1	
16	10X30X15;NATR10	支撑滚轮轴承 Bearing	2	特殊订货(带滚动爪时用) Option roller

大孔跟刀架 BIG HOLE FOLLOWER REST

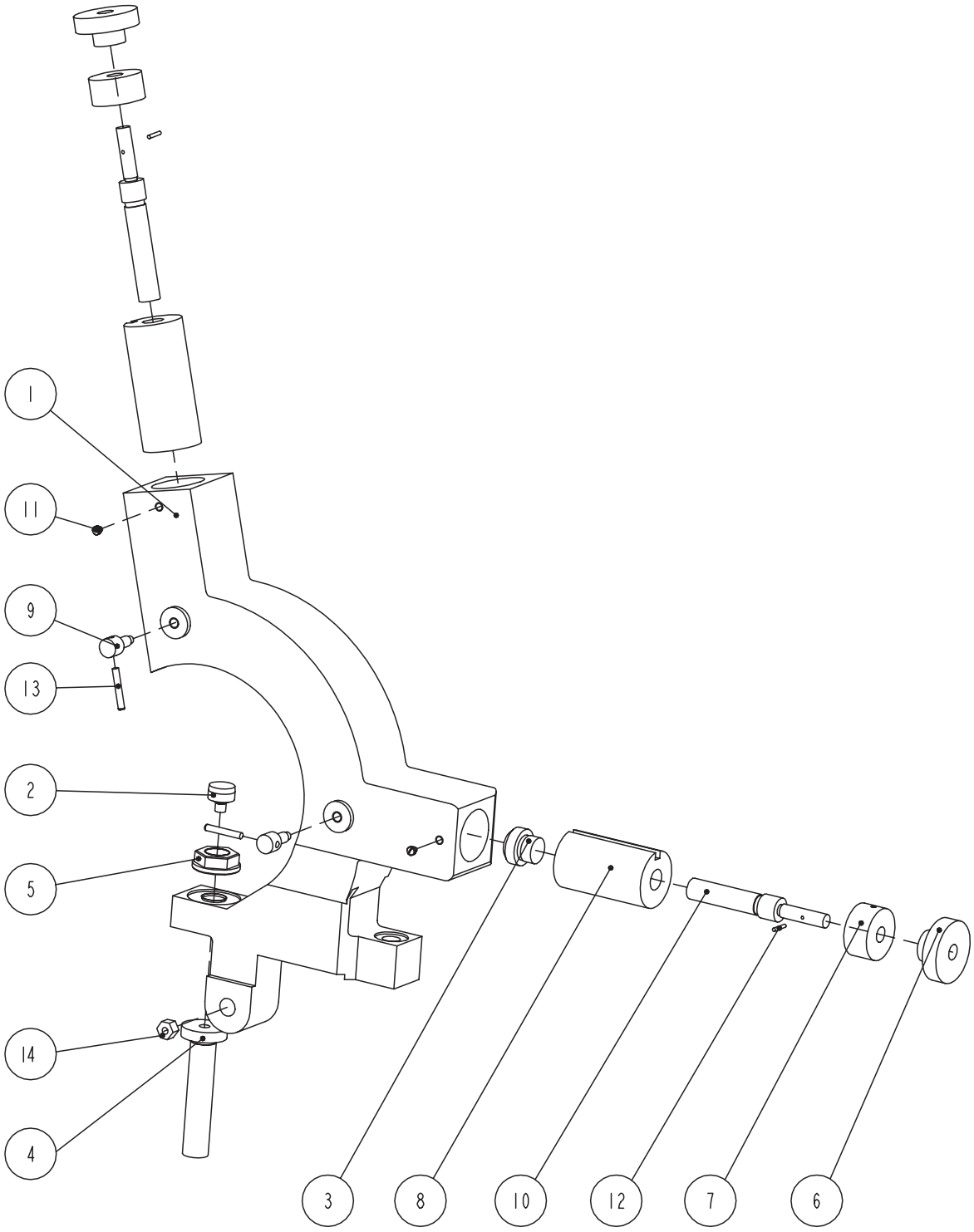

BIG HOLE FOLLOWER REST

序号 Item	零件编号 Part Number	零件名称 Description	数量 Qty	备注 Remark
1	CDS-A65101	大孔跟刀架体 Body	1	400mm
	CDS-A65102	大孔跟刀架体 Body	1	500mm
	CDS-A65103	大孔跟刀架体 Body	1	560mm
	CDS-A65104	大孔跟刀架体 Body	1	660mm
	CDS-A65105	大孔跟刀架体 Body	1	760mm
2	CDS-A65106	支撑销 Figer	1	
3	CDS-A65107	支撑销 Figers	2	
4	CDS-A65701	螺杆 Screw	1	
5	CDS-A65702	螺母 Nut	1	
6	CDS-A65703	把手 Handle	2	
7	CDS-A65704	套 Bush	2	
8	CDS-A65705	滑套 Sliding bush	2	
9	CDS-A65706	螺钉 Screw	2	
10	CDS-A65707	丝杠 Lead screw	2	
11	M8X10;GB72	螺钉 Screw	2	
12	A3X20;GB117	销 PINS	2	
13	A4X60;GB119	销 PINS	2	
14	M16X65;GB5782	螺栓 BOLT	2	

乱扣盘 Thread Dial indicator

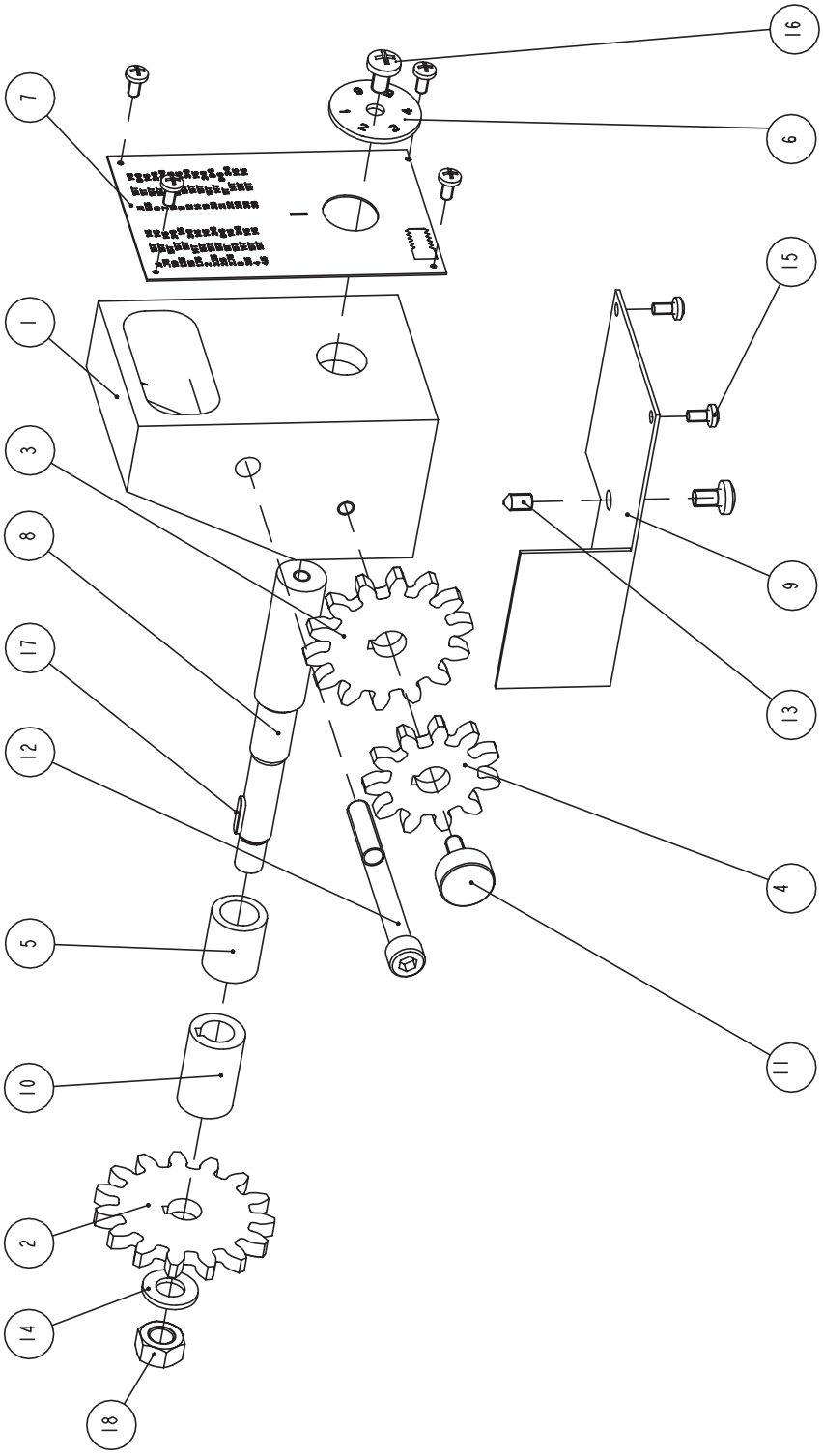

乱扣盘 Thread Dial indicator

序号 Item	零件编号 Part Number	零件名称 Description	数量 Qty	
1	CDS-69101	壳体 Sheel	1	
2	CDS-69102	斜齿轮 T15 Gear	1	for metric machine
	CDS-69105	斜齿轮 T12 Gear	1	for imperial machine
3	CDS-69103	斜齿轮 T14 Gear	1	for metric machine
4	CDS-69104	斜齿轮 T11 Gear	1	for metric machine
5	CDS-69106	隔套 Flang	1	
6	CDS-69301	标牌 Dial indicator	1	
7	CDS-69302	标牌 Name plate	1	for metric machine
	CDS-69303	标牌 Name plate	1	for imperial machine
8	CDS-69701	转轴 Shaft	1	
9	CDS-69702	挡板 Baffle	1	
10	CDS-69703	隔套 Flang	1	
11	M6X16;GB1017	螺钉 Screw	1	
12	M8X80;GB70	螺钉 Screw	1	
13	M6X10;GB78	螺钉 Screw	1	
14	10;GB97.1	垫圈 Washer	1	
15	M4X8;FS-0272	螺钉 Screw	6	
16	M6X10;FS-0292	螺钉 Screw	2	
17	4X16;GB1096	键 Keys	1	
18	M10-Zn;GB889	螺母 Nut	1	

卡盘防护
Chuck Guard

ONLY FOR D6 and D8 SPINDLE NOSE

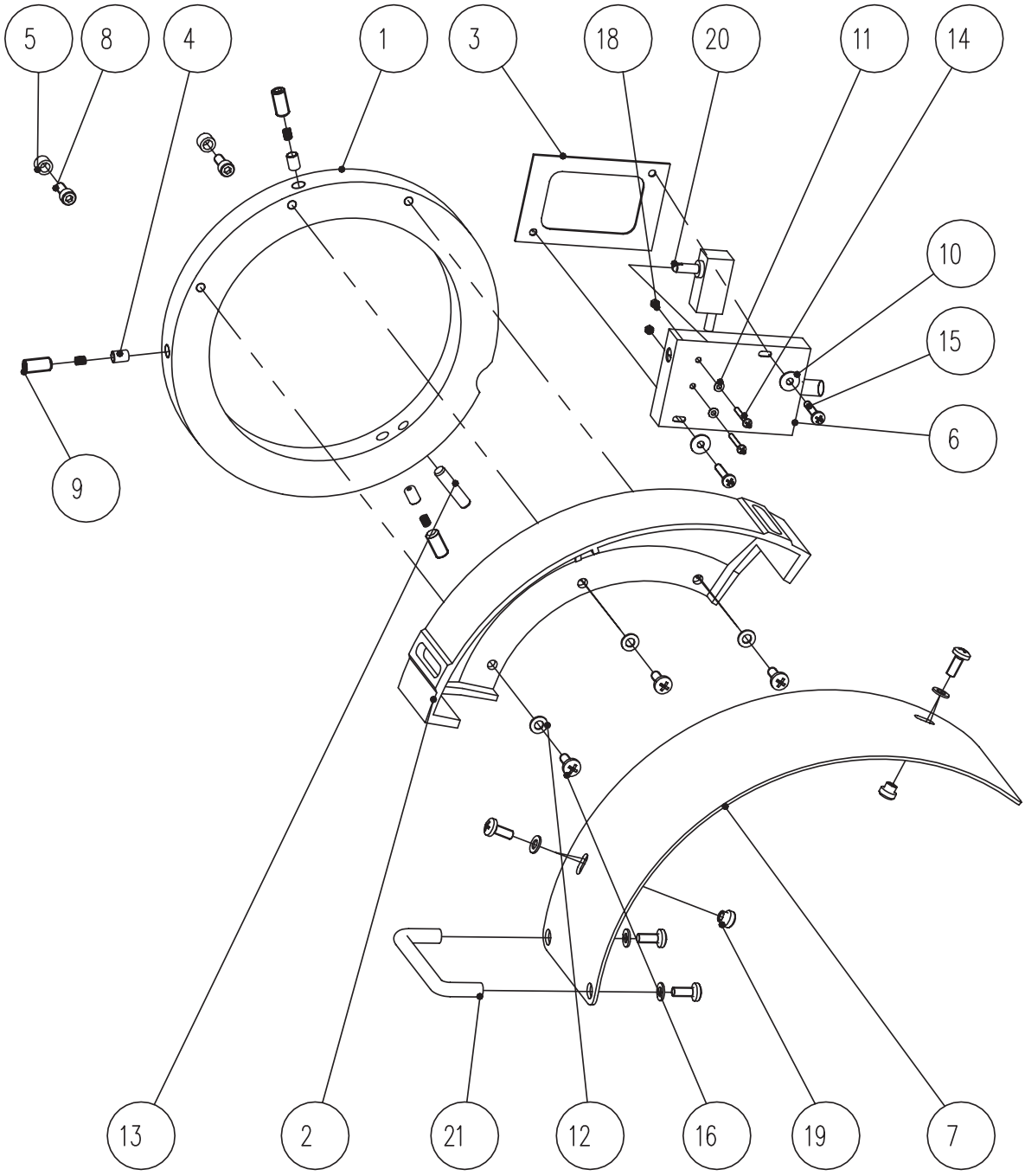

序号 Item	零件编号 Part Number	零件名称 Description	数量 Qty	备注 Remark
1	CDS-82101A	FOR D6 SPINDLE 环 RING	1	FOR D6 & A1-6 SPINDLE NOSE
	CDS-82102A	FOR D8 SPINDLE 环 RING	1	FOR D8 & A1-8 SPINDLE NOSE
2	CDS-82301	夹盘防护罩 COVER	1	
3	CDS-82501	垫 GASKET	1	
4	CDS-82701	定位销 PIN	3	
5	CDS-82702	限位柱 PIN	2	
6	CDS-82703	电气开关罩 COVER	1	
7	CDS-82704A	盖 COVER	1	
8	M8X20; GB70	螺钉 SCREW	2	
9	M12X25; GB77	螺钉 SCREW	3	
10	6; GB96	垫圈 WASHER	2	
11	4; GB97.1	垫圈 WASHER	2	
12	8; GB97.1	垫圈 WASHER	7	
13	10X45; GB120	销 PIN	1	
14	M4X30; GB818	螺钉 SCREW	2	
15	M6X30; GB818	螺钉 SCREW	3	
16	M8X20; GB818	螺钉 SCREW	7	
17	GB2089	弹簧 SPRING	3	
18	M4; GB6170	螺母 NUT	2	
19	M8; J19-1	螺母 NUT	2	
20	LXW5-A11Q1/F	开关 SWITCH	1	
21	Z96-6	把手 HANDLE	1	

刀架防护
Chip Gurd

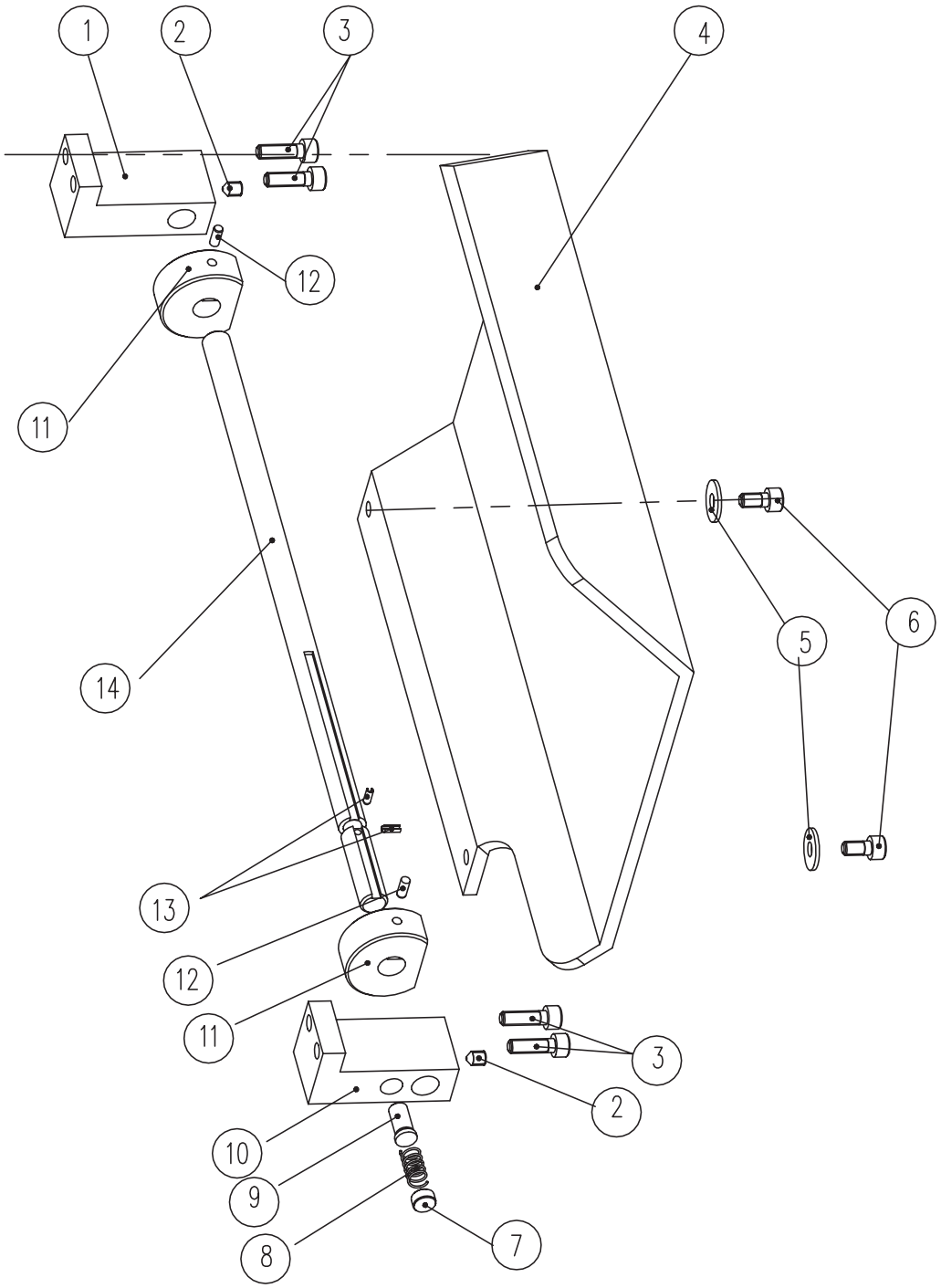

刀架防护
Chip Gurd

序号 Item	零件编号 Part Number	零件名称 Description	数量 Qty
1	86102	支 架 BRACKET	1
2	M6X8; GB78	螺 钉 SCREW	2
3	M6X20; FS-0312	螺 钉 SCREW	4
4	86501	有机玻璃 plexiglas	1
5	6; GB96	垫 圈 WASHER	2
6	M6X12; FS-0294	螺 钉 SCREW	2
7	10n6; Q56-1	堵 PLUG	1
8	0.8X8X25; GB2089	弹 簧 SPRING	1
9	86702	顶 头 PIN	1
10	86101	支 架 BRACKET	1
11	86703	套 SLEEVE	2
12	4X10; GB119	销 PIN	2
13	3X8; GB879	销 PIN	2
14	86701	导 轴 BAR	1

后防护
REAR GUARD

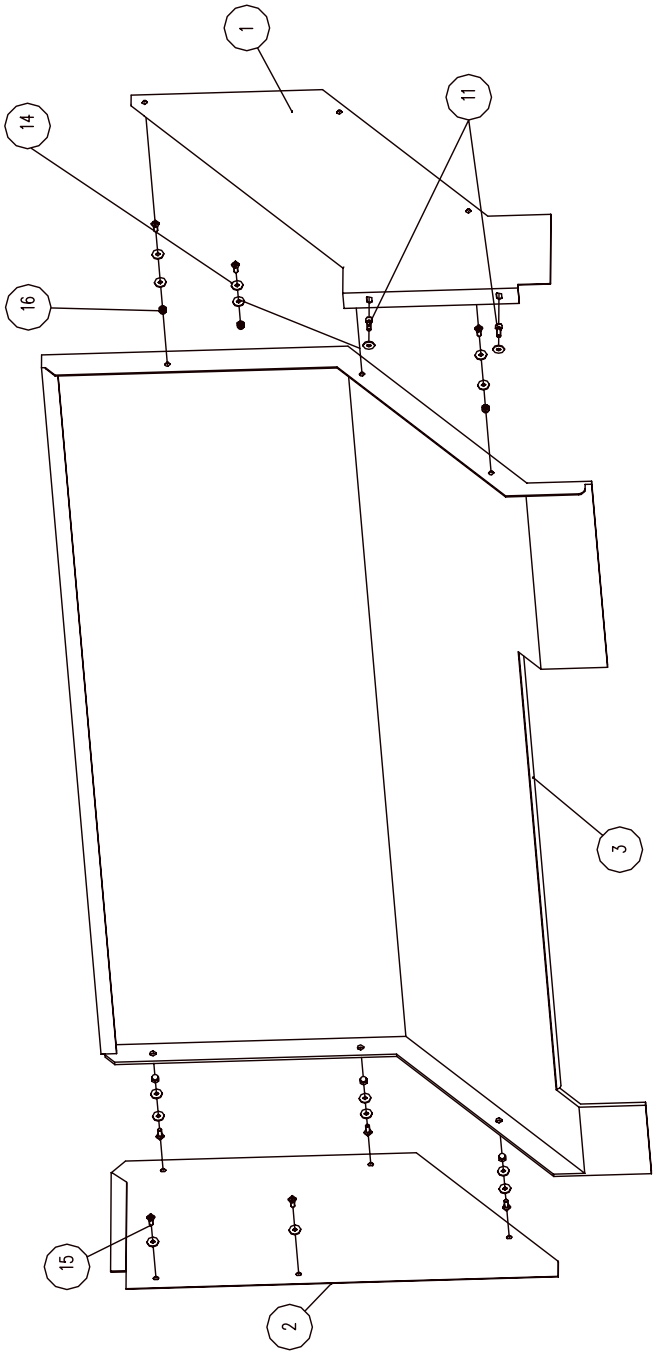

750mm ~2200mm

后 防 护
REAR GUARD

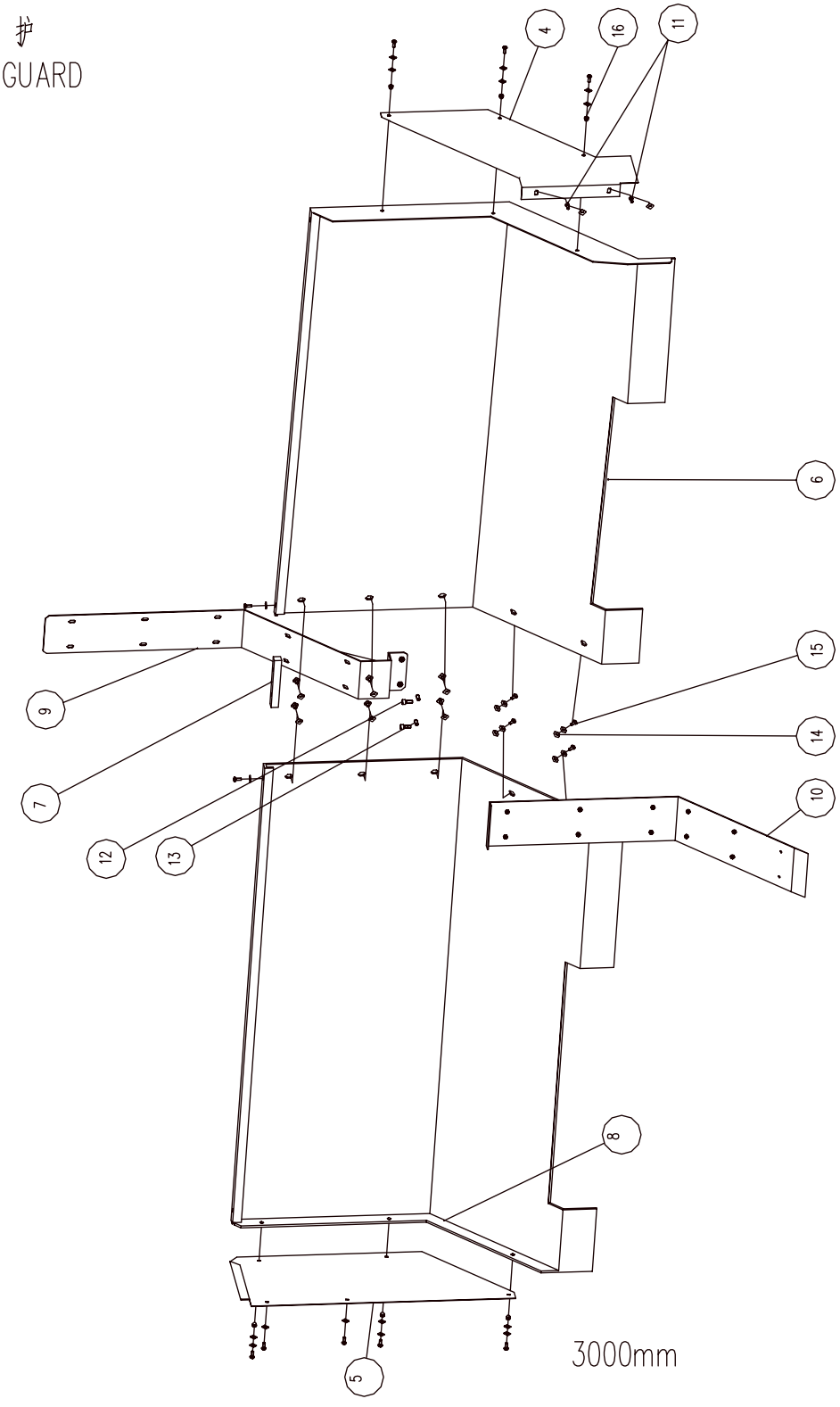

后防护
REAR GUARD

序号 Item	零件编号 Part Number	零件名称 Description	数量 Qty	备注 Remark
1	CDS-B86702	挡板 Baffle-plate	1	ø400,ø500mm
	CDS-B86722	挡板 Baffle-plate	1	ø560mm
	CDS-B86732	挡板 Baffle-plate	1	ø660,ø760mm
	CDS-B86707/2200	挡板 Baffle-plate	1	ø400,ø500,ø560/2200mm
	CDS-B86737/2200	挡板 Baffle-plate	1	ø660,ø760/2200mm
2	CDS-B86703	挡板 Baffle-plate	1	ø400mm
	CDS-B86713	挡板 Baffle-plate	1	ø500,ø560mm
	CDS-B86733	挡板 Baffle-plate	1	ø660mm
	CDS-B86743	挡板 Baffle-plate	1	ø760mm
3	CDS-B86701/1000	后防护 Back shield	1	ø400mm
	CDS-B86701/1500	后防护 Back shield	1	ø400mm
	CDS-B86701/2000	后防护 Back shield	1	ø400mm
	CDS-B86701/2200	后防护 Back shield	1	ø400mm
	CDS-B86701/750	后防护 Back shield	1	ø400mm
	CDS-B86711/1000	后防护 Back shield	1	ø500,ø560mm
	CDS-B86711/1500	后防护 Back shield	1	ø500,ø560mm
	CDS-B86711/2000	后防护 Back shield	1	ø500,ø560mm
	CDS-B86711/2200	后防护 Back shield	1	ø500,ø560mm
	CDS-B86711/750	后防护 Back shield	1	ø500,ø560mm
	CDS-B86731/1000	后防护 Back shield	1	ø660mm
	CDS-B86731/1500	后防护 Back shield	1	ø660mm
	CDS-B86731/2000	后防护 Back shield	1	ø660mm
	CDS-B86731/2200	后防护 Back shield	1	ø660mm
	CDS-B86731/750	后防护 Back shield	1	ø660mm
	CDS-B86741/1000	后防护 Back shield	1	ø760mm
	CDS-B86741/1500	后防护 Back shield	1	ø760mm
	CDS-B86741/2000	后防护 Back shield	1	ø760mm
	CDS-B86741/2200	后防护 Back shield	1	ø760mm
	CDS-B86741/750	后防护 Back shield	1	ø760mm
4	CDS-B86702	挡板 Baffle-plate	1	ø400,ø500/3000mm
	CDS-B86722	挡板 Baffle-plate	1	ø560/3000mm
	CDS-B86732	挡板 Baffle-plate	1	ø660,ø760/3000mm

后防护
REAR GUARD

序号 Item	零件编号 Part Number	零件名称 Description	数量 Qty	备注 Remark
5	CDS-B86703	挡板 Baffle-plate	1	ø400/3000mm
	CDS-B86713	挡板 Baffle-plate	1	ø500,ø560/3000mm
	CDS-B86733	挡板 Baffle-plate	1	ø660/3000mm
	CDS-B86743	挡板 Baffle-plate	1	ø760/3000mm
6	CDS-B86714/3000	后防护 Back shield	1	ø500,ø560mm
	CDS-B86734/3000	后防护 Back shield	1	ø660mm
	CDS-B86744/3000	后防护 Back shield	1	ø760mm
7	CDS-B86716/3000	连接条 Join block	1	3000mm
8	CDS-B86711/3000	后防护 Back shield	1	ø500,ø560mm
	CDS-B86731/3000	后防护 Back shield	1	ø660mm
	CDS-B86741/3000	后防护 Back shield	1	ø760mm
9	CDS-B86715/3000	支架 Bracket	1	ø500mm
	CDS-B86725/3000	支架 Bracket	1	ø560mm
	CDS-B86735/3000	支架 Bracket	1	ø660mm
	CDS-B86745/3000	支架 Bracket	1	ø760mm
10	CDS-B86718/3000	挡板 Baffle-plate	1	ø500,ø560mm
	CDS-B86738/3000	挡板 Baffle-plate	1	ø660mm
	CDS-B86748/3000	挡板 Baffle-plate	1	ø760mm
11	M6X16; GB70	螺钉 Screw	2	
12	M8X20; GB70	螺钉 Screw	2	3000mm
13	M8X20; GB77	螺钉 Screw	2	3000mm
14	6-Zn; GB96	垫圈 Washer	16	750~2200mm
	6-Zn; GB96	垫圈 Washer	38	3000mm
15	M6X16-Zn; GB818	螺钉 Screw	8	750~2200mm
	M6X16-Zn; GB818	螺钉 Screw	20	3000mm
16	M6-Zn; GB889	螺母 Nut	6	

纵向碰停装置 LONGNITUDINAL STOP ACCESSRIES

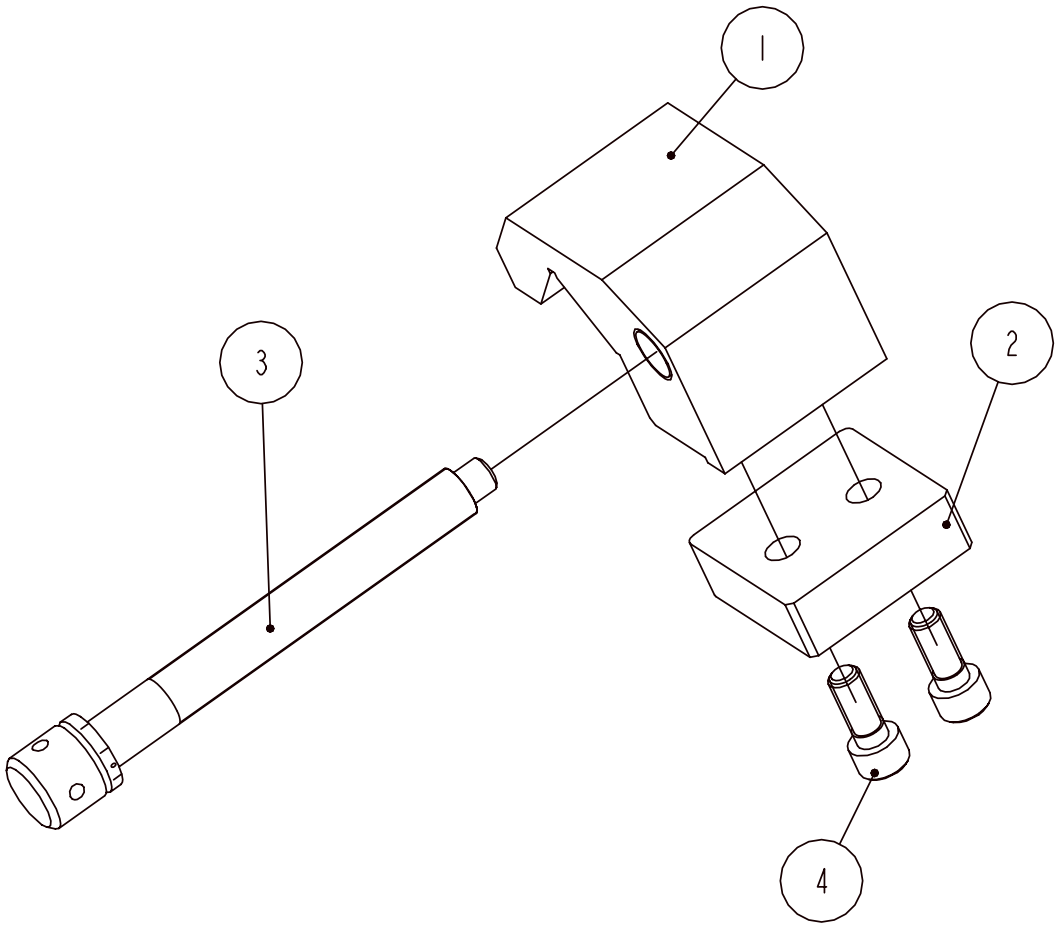

序号 Item	零件编号 Part Number	零件名称 Description	数量 Qty
1	CDS-89101	碰停块 BLOCK	1
2	CDS-89102	压板 CLAMP	1
3	CDS-89701	碰停螺杆 SCREW	1
4	M10X25 GB70	螺钉 SCREWs	2

Notice: To avoid coolant pump overload travelling, setting breaker QM3 or thermal relay FR3, before delivery the current set value is set according to the main motor nameplate's rated current. In normal condition, dont't adjust, it necessory microadjustment, coule be done by professional persons .

13.4.5 Rapid motor start and stop

Pull the rapid feed lever to the needed direction, press the rapid buttonSB1 in the rapid feed handle, KM2 energize engaging, so rapid motor rotas and it can move rapidly in this direction. Loosen the button SB3, KM2 power off releasing, the rapid motor M2 stops rotating.

Notice: To avoid rapid motor short circuit, mount breaker QM2 in circuit to process the short circuit protection.

13.4.6 Emergency stop and relieve

Press down the emergency stop button SB4、SB5 on headstock the control panel or on the saddle, all the motors stop running, the machine is in the emergency stop state. Press the emergency stop button SB4 or SB5 as arrow direction, emergency stop button will reset, the emergency stop state will be relieved.

Notice: Press down the emergency stop button the electric parts in machine still with electric, only turn off the main power switch QF, except the input terminals L1、L2、L3 of main power with electric, others are all without electric.

13.4.7 Illumination

The button is at the base of the work lamp, press it, the lamp lights, press it again, the lamp turns off. The short circuit protection is reallized by means of the miniature relay.

Notice: The work lamp's normal power is 40W, if change it for big power bulb, transformer is in overload heat state in a long period, it will burn out.

13.4.8 Machine stop

If stop using machine for a while, for the safety of person and equipment the main power switch QF shoule be cut off.

13.5 Electric equipments service

13.5.1 Preventive check

To ensure the safety of person and equipment, the electric parts should be checked once every year and make the detection note, if any problem is found, take measures to solve it.

13.5.2 Insulating resistance measuring

Use 500V megameter to measure the main loop and control loop and the insulating resistance should more than 1 megohm.

13.5.3 Earthing protection check

Each motor in this equipment, the control panel in front of the headstock, the button board in saddle, XT3 terminal block, XT4 terminal board are all adopted ground protection, check the earth line to see if it is continuous also the earthing bolt must be fastened.

13.5.4 Service for common fault

Refer to: electric control system diagram, electric circuit diagram, electric wiring diagram and electric panel layout diagram.

1) *The spindle can run*

When the spindle don't run please check as following sequence:

- Check the the power if loses phase.
- Check the breaker QM1 to see if it is disconnected.
- Check the chuck guard (special order) to see if it is closed and the chuck guard switch Q3(special order) normal open contact works well.
- Check the change gear cover to see if it is closed. Check the guard door switch SQ1 normal open contact to see if it works well.
- Check the door of niche to see if it is closed and the switch off SQ2 normal open contact works well. (Without the electric cabinet)
- Check the operating handle to see if it is in the middle position and the electromagnetic clutch machine, interlock switch SQ5 and normal close contact SQ6 works well.
- Check the Start button SB3 normal open contact to see if it is normal and the connection is right.
- Check the contact's switch on and cut off to see it they are normal.
- Check the terminal in circuit for looseness.

2) *The coolant pump can not rotate*

Check as the following sequence :

- Check the power if loses phase.
- Check the breaker QM3 if it is disconnected.
- Check the rotary switch SB2 contact to see if it is normal and the connection is right.
- Check the contact's switch on and cut off if normal.
- Check the terminals in the electric circuit for looseness.

3) *Rapid motor can not work*

Refer to the following sequence:

- Check the power if loses phase.

- Check the breaker QM2 or fuse FU2 if switches off.
- Check the button SB1 normal open contact if it works well and if the connection is right.
- Check the contact's switch on and cut off if it is normal.
- Check the terminal for looseness.

13.5.5 Maintenance of the electric appliances

The motors should be cleaned once a year. Dust and dirty matters on the motor coils should be removed with a piece of clean cloth or a hand blower. The motor bearings should be cleaned and the lubricant on them should be replaced. If any bearing of motor is worn seriously, replace it with new one. The contacts of contactors should be checked regularly. The surface of contactor anchors should be lubricated with machine oil and then wipped clean for preventing from corrosion.

13.6 Electric drawing

13.7 Supplement to double voltage machine

When the voltage for a double voltage machine (220V/440V or 230V/460V) needs to be changed, it is necessary to readjust the wire connection and replace the related elements.

1) Change the wiring mode of main motor M1, coolant pump motor M3 and rapid motor M2. For the position of M1, M3 and M2, see the diagram for electric control system. A special wrench should be used for removing motor M3.

2) Change the connecting wires of the control transformer. Replace power switch QF1, thermal relay FR1, FR2 and FU2 or replace breaker QM1, QM2 and QM3. For the details see the list of electric elements.

3) Main motor M1 wiring diagram

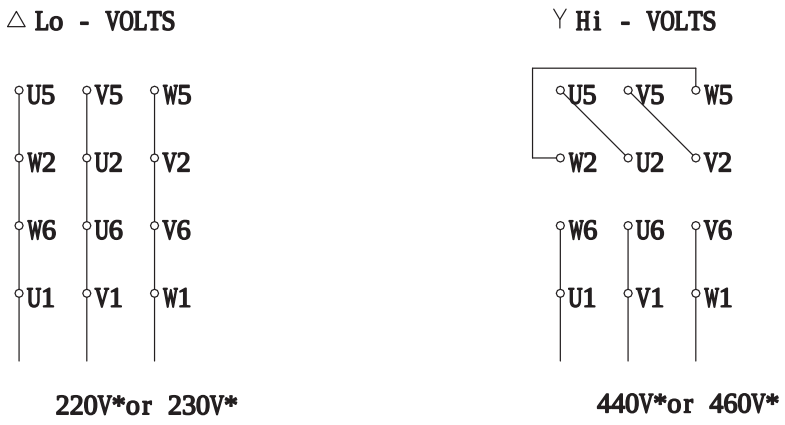

4) Wiring diagram of rapid motor M2 and coolant pump motor M3



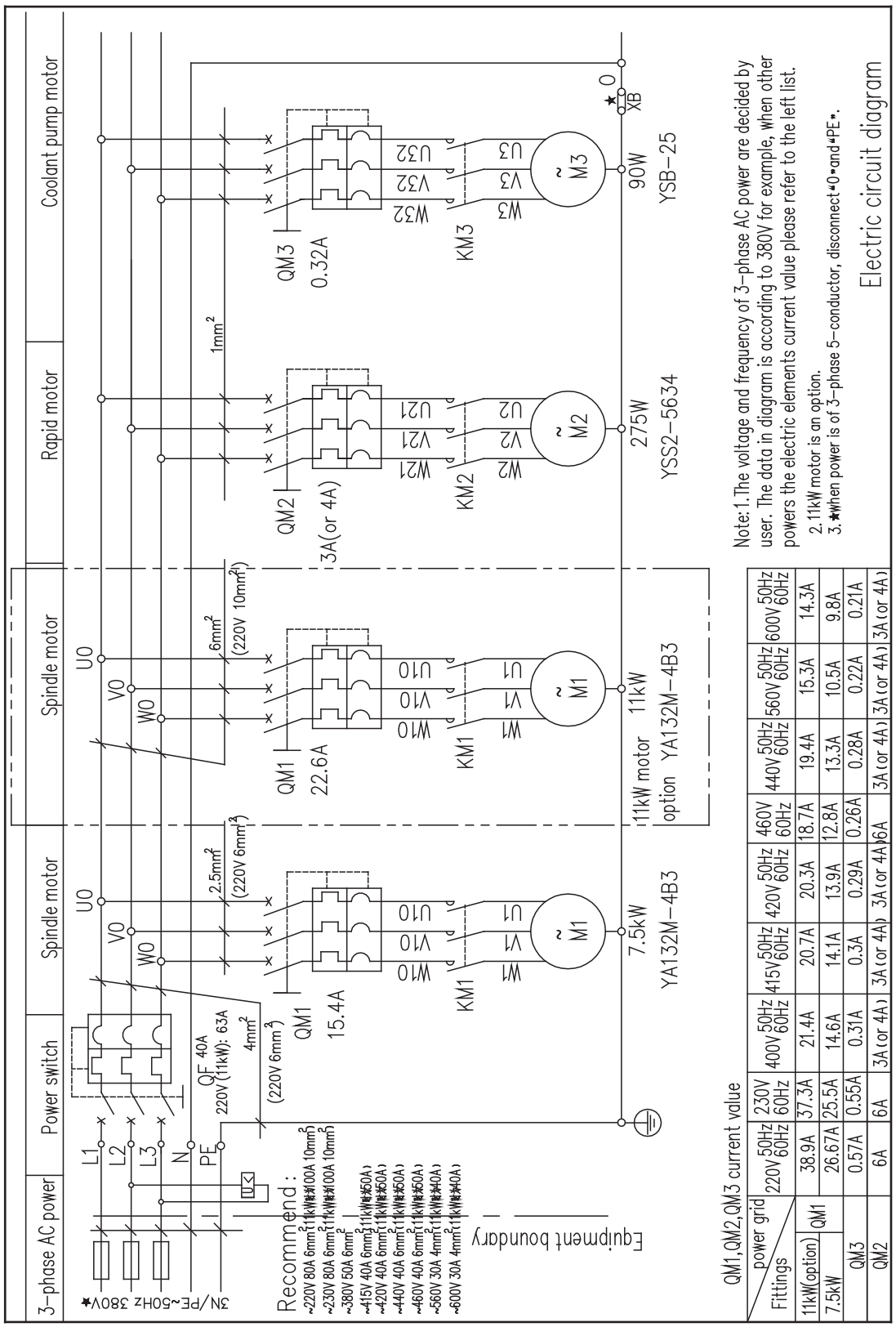

QM1,QM2,QM3 current value

Fittings \ power grid		220V 50Hz 60Hz	230V 60Hz	400V 50Hz 60Hz	415V 50Hz 60Hz	420V 50Hz 60Hz	460V 60Hz	440V 50Hz 60Hz	560V 50Hz 60Hz	600V 50Hz 60Hz
11kW(option)	QM1	38.9A	37.3A	21.4A	20.7A	20.3A	18.7A	19.4A	15.3A	14.3A
7.5kW		26.67A	25.5A	14.6A	14.1A	13.9A	12.8A	13.3A	10.5A	9.8A
QM3		0.57A	0.55A	0.31A	0.3A	0.29A	0.26A	0.28A	0.22A	0.21A
QM2		6A	6A	3A(or 4A)	3A(or 4A)	3A(or 4A)	6A	3A(or 4A)	3A(or 4A)	3A(or 4A)

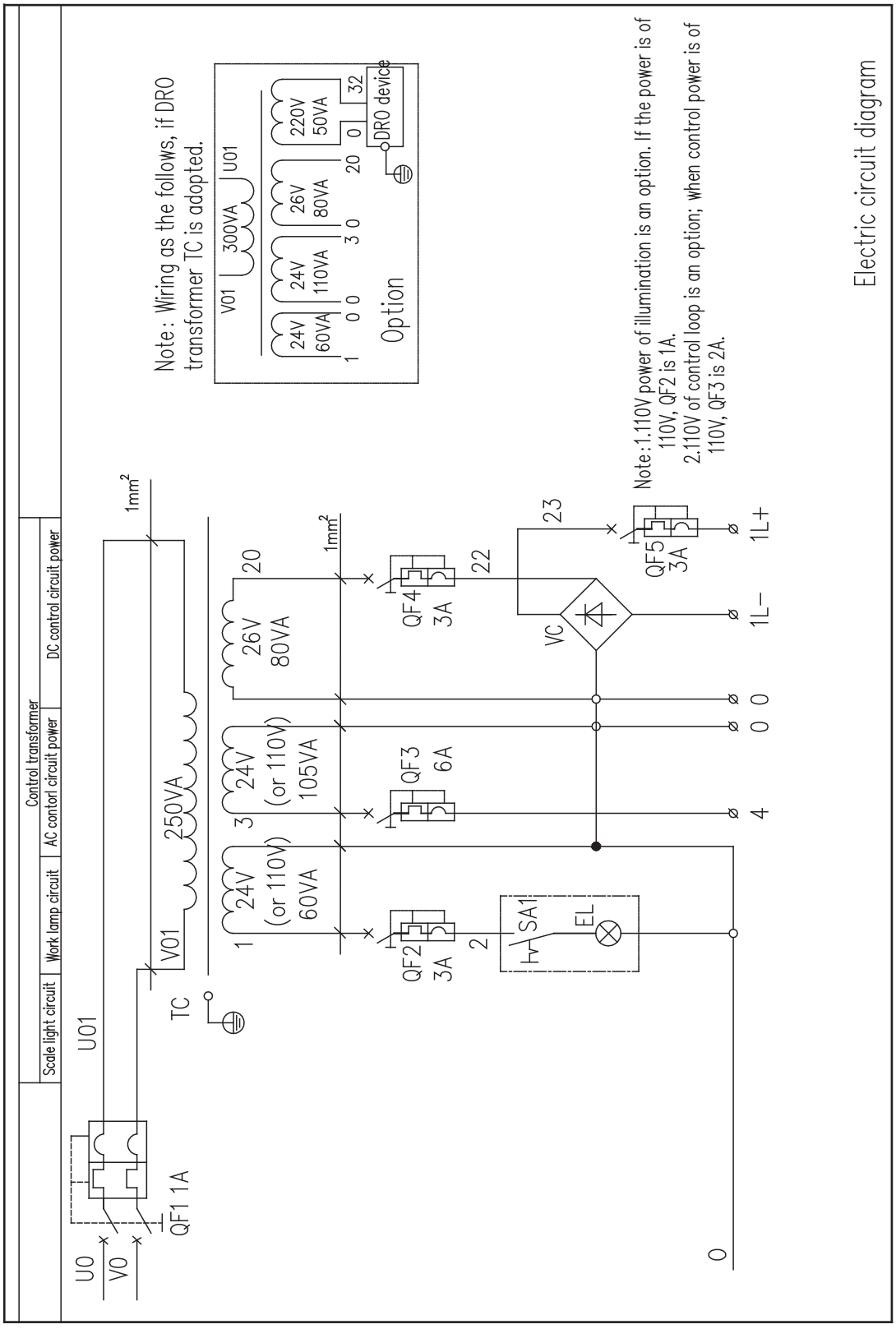
Control transformer
Scale light circuit
Work lamp circuit
AC contorl circuit power
DC control circuit power
U0
V0
QF1 1A
U01
1mm²
TC
V01
250VA
1
24V
(or 110V)
60VA
3
24V
(or 110V)
105VA
20
26V
80VA
1mm²
QF2
3A
QF3
6A
QF4
3A
2
SA1
EL
22
VC
23
QF5
3A
4
0 0
1L−
1L+
0
Note: Wiring as the follows, if DRO transformer TC is adopted.
V01
300VA
U01
24V
60VA
24V
110VA
26V
80VA
220V
50VA
1 0 0
3 0
20
0
32
Option
DRO device
Note:1.110V power of illumination is an option. If the power is of 110V, QF2 is 1A.
2.110V of control loop is an option; when control power is of 110V, QF3 is 2A.
Electric circuit diagram

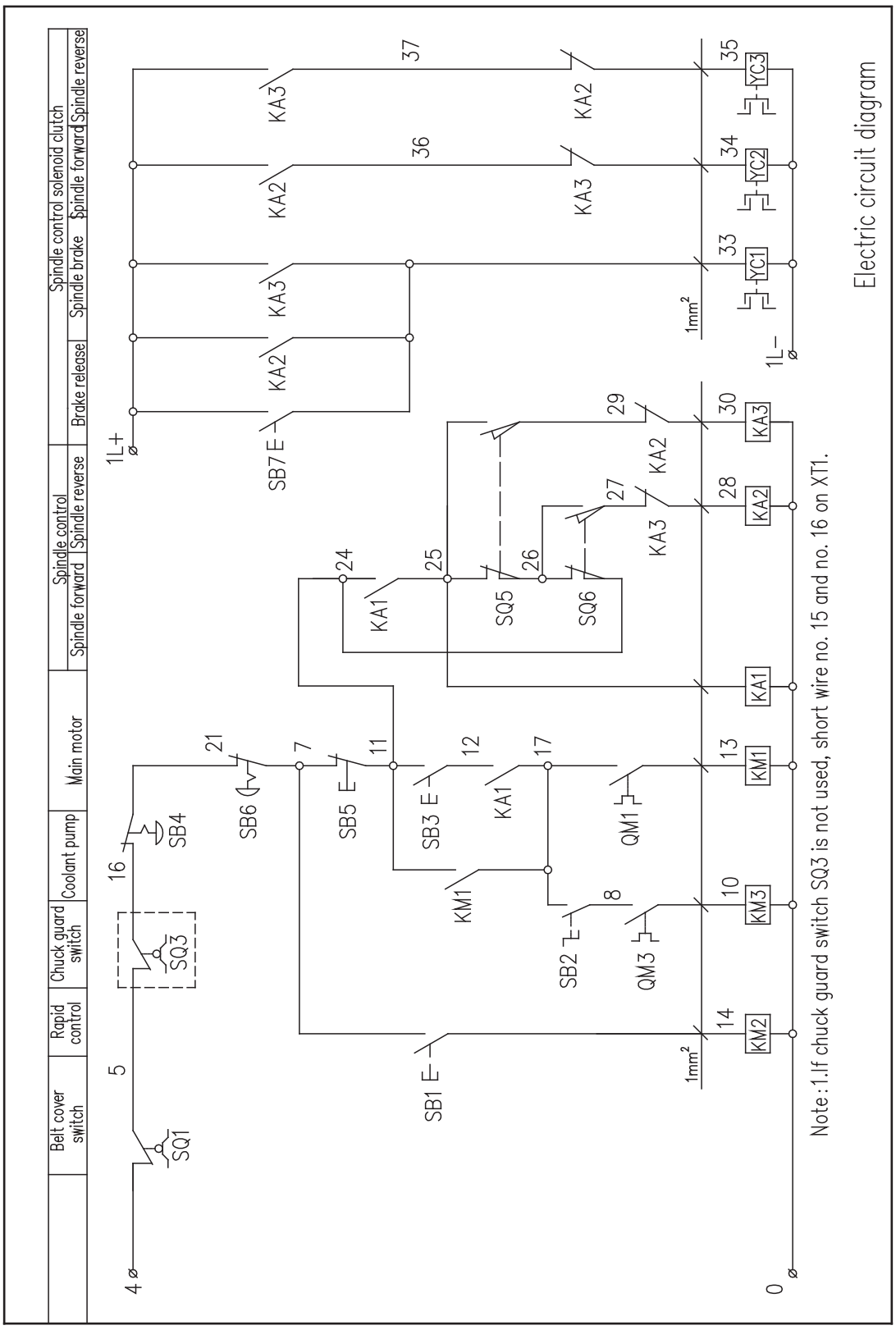
Belt cover switch
Rapid control
Chuck guard switch
Coolant pump
Main motor
Spindle control
Spindle forward
Spindle reverse
Brake release
Spindle brake
Spindle control solenoid clutch
Spindle forward
Spindle reverse
Electric circuit diagram
Note: 1.If chuck guard switch SQ3 is not used, short wire no. 15 and no. 16 on XT1.

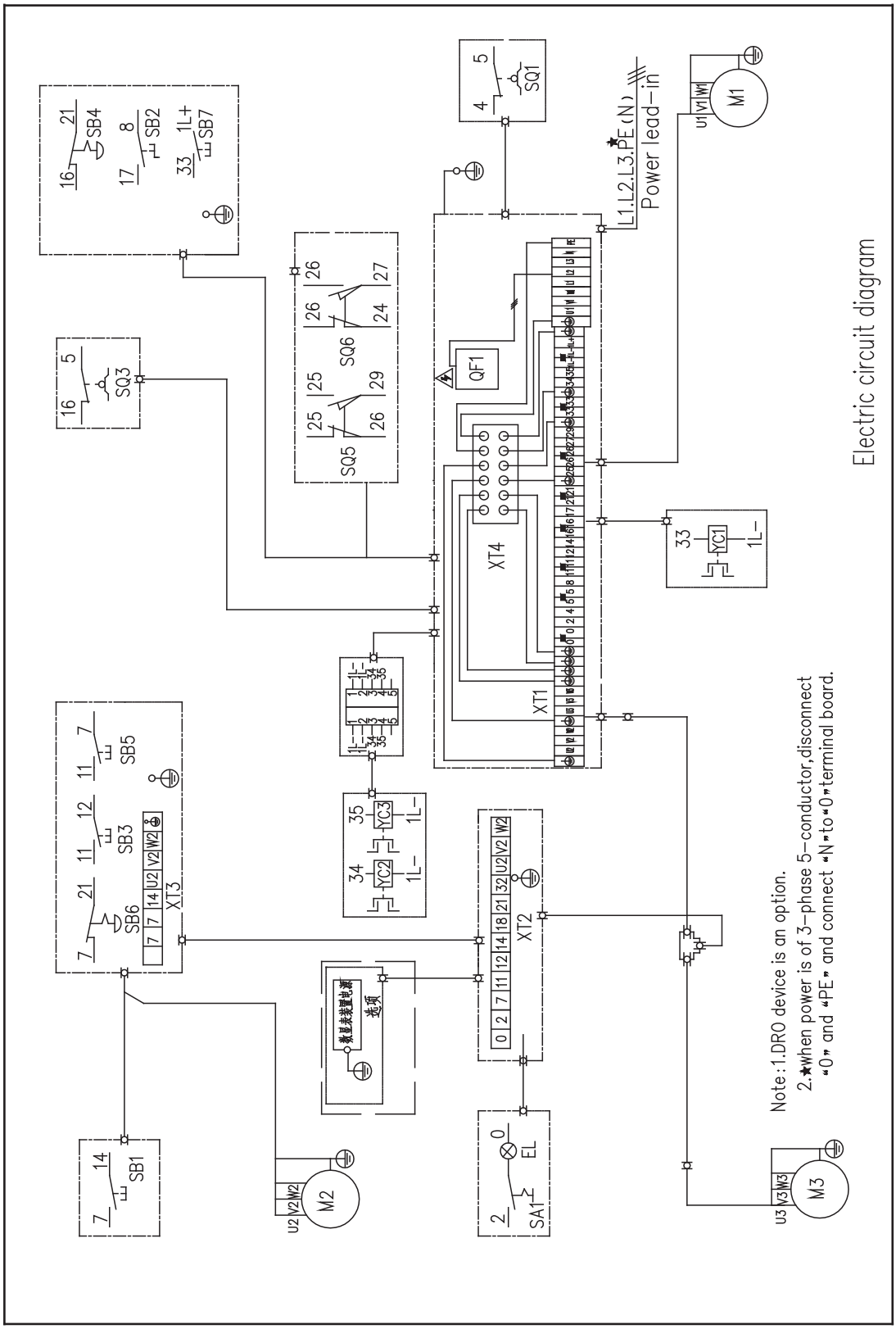
Electric circuit diagram
Power lead-in
L1.L2.L3.PE(N)
Note:1.DRO device is an option.
2.★when power is of 3-phase 5-conductor,disconnect
"0" and "PE" and connect "N"to"0"terminal board.
SB1
SB2
SB3
SB4
SB5
SB6
SB7
SA1
SQ1
SQ3
SQ5
SQ6
QF1
XT1
XT2
XT3
XT4
M1
M2
M3
选项

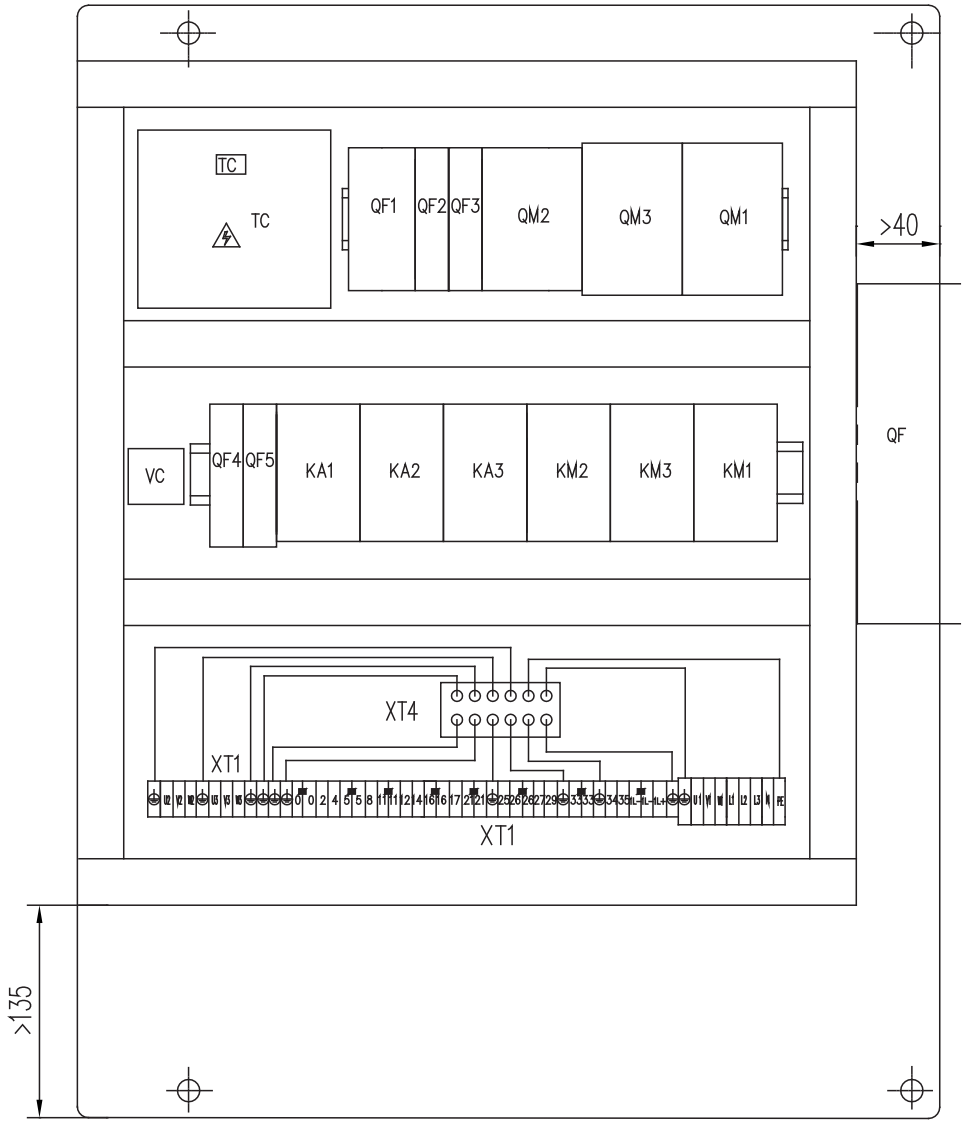

Note: 1. At least 0.2 m is required between bottom of the electric cabinet and electric parts on the panel, namely, there is a 135mm distance to the bottom of electric panel, and at least 40mm to the right side.
2. Only allow one conductor connect to one terminal.

Layout of electric panel

Electric element list

No.	Code	Model	Name	Specification	Qty	Usage	Remarks
1	TC		Isolating transformer	380V 50Hz / 24V 60VA 250VA / 24V 110VA 26V 80VA	1	Change the voltage	
2	QF1	C32ND2P1A	Breaker	1A 2P	1	Primary coil protection	Schneider
3	QF2	C32ND1P3A	Breaker	3A 1P	1	Short circuit protection of work lamp	Schneider
4	QF3	C32ND1P6A	Breaker	6A 1P	1	Control circuit short protection	Schneider
5	QF4	C32ND1P3A	Breaker	3A 1P	1	DC control circuit short protection	Schneider
6	QF5	C32ND1P3A	Breaker	3A 1P	1	Commutator short circuit protection	Schneider
7	QM1	GV2-M20C	Breaker	10-16A set to 15.4A		Main motor protection	Schneider
8	QM2	C32ND3P4A	Breaker	4A 3P		Coolant pump motor protection	Schneider
9	QM3	GV2-M03C	Breaker	0.25-0.4A set to 0.32A		Rapid motor protection	Schneider
10	VC	QL-25/200V	Commutator	25A 200V		Supply DC power	
11	KA1	CA2-DN22B5C	Relay	~24V 50Hz	1	Control spindle forward solenoid clutch	Schneider
12	KA2	CA2-DN22B5C	Relay	~24V 50Hz	1	Control spindle reverse solenoid clutch	Schneider
13	KA3	CA2-DN22B5C	Relay	~24V 50Hz	1	Control spindle motor neutral position switch	Schneider
14	KM1	LC1-D1810B5C	AC contactor	Coil voltage 24V 18A	1	Control spindle motor	Schneider
15	KM2	LC1-D0910B5C	AC contactor	Coil voltage 24V 9A	1	Control coolant pump motor	Schneider
16	KM3	LC1-D0910B5C	AC contactor	Coil voltage 24V 9A	1	Control rapid motor	Schneider
17	QF	S1N125R25-FFC 3P	Power switch	Set to 25A 3P 380V undervoltage trip coil	1	Mains	ABB
18	XT1		Terminal board			For wiring	WAGO, GERMANY
19	XT4		Earth plate			Earth protection	WAGO, GERMANY
20		TC3025	Wire duct			For wiring	
21			Rail way	35mm		Mount electric element	

Note: For some electric components' specific type, refer to objects.

Electric element list

No.	Code	Model	Name	Specification	Qty	Usage	Remarks
22	SB1	LA9TH	Rapid travel	Black	1	Rapid control	
23	SB2	XB2-BD21C	Coolant pump	Black	1	Coolant pump ocntrol	Schneider
24	SB3	XB2-BA11C	Spindle start	White	1	Start the spindle	Schneider
25	SB4	XB2-BS542C	ESB	Red	2	Emergency stop	Schneider
26	SB6						
27	SB5	XB2-BA22C	Stop	Black	1	Stop the spindle	Schneider
28	SB7	XB2-BA21C	Brake release	Black	1	Brake release	Schneider
29	SQ1	D4DP-25FS	Belt cover switch		1	Protect belt cover	OMRON
30	SQ3	XCM-B5022	Chuck protection		1	Protect the chuck	Schneider
31	SQ5	XEP4-E1FDA326	Mini rapid		2	Forward/reverse	Schneider
32	SQ6						
33	EL	JC11A	Work lamp		1	Illumination	Shenyang Yihua

Note: For some electric components' specific type, refer to objects.

Appendix-Ohter alarm labels and nameplates

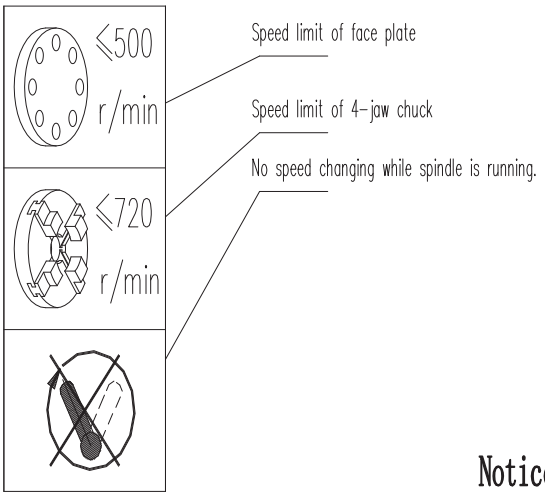



Notice safety caution label (I S O3864)

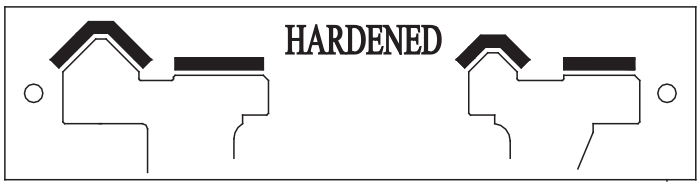

Bed hardened label

Control label

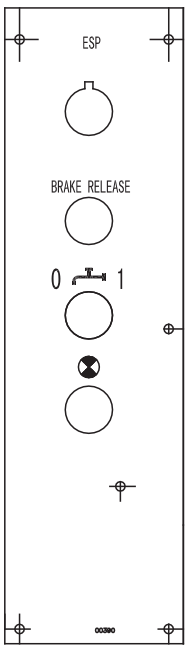

Main motor label

ITEM		M1	
MOTOR TYPE	YA132M-4 (B3)		
POWER PHASE	3/PE		
VOLTAGE RATING	380 V	POWER FREQUENCY	50/60 Hz
RATED POWER	7.5 KW	RATED CURRENT	15.4 A

Coolant pump label

ITEM		M3	
MOTOR TYPE	YSB-25TH		
POWER PHASE	3/PE		
VOLTAGE RATING	380 V	POWER FREQUENCY	50/60
RATED POWER	150 W	RATED CURRENT	0.54 A

Lubricating label

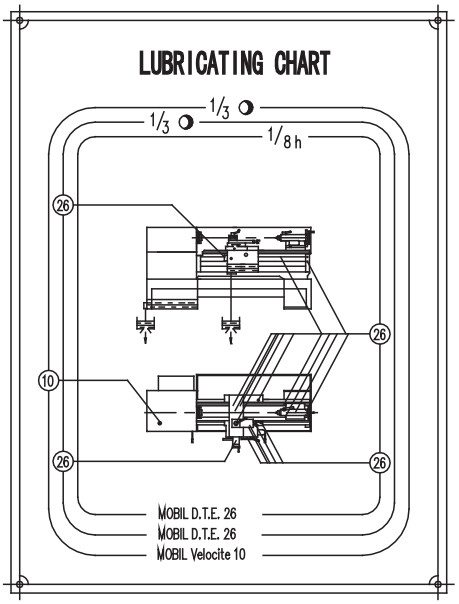

Lathe CE label

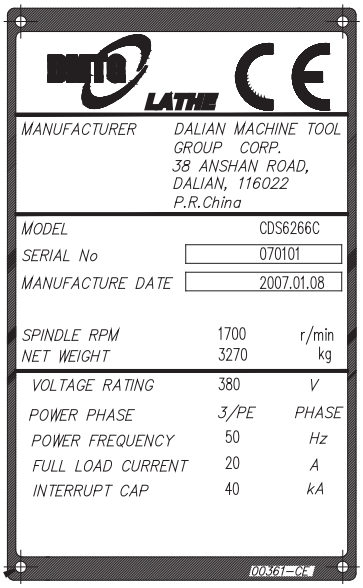

8.6 Interlock of leadscrew and feed shaft

To avoid feed rod and lead screw both drive apron, mutual interference makes accidents. There mounts the feed rod and lead screw interlocking guard device in apron. When the operating manual 1 turn to the left or right direction to operate the apron and tool post movement, shaft 2 is fore and aft movement, that make the pin 4 couldn't drive pin 5, and make the pin 4 in the V-slot of the half nut shaft 6 lock the rotary of half nut shaaft, that the half nut won't close and it couldn't drive the apron to move by lead screw; When the operating handle 1 turn to the around direction to operate the slide carriage and top slide, shaft 3 rotates, and make the axial slot of shaft 3 and the summmit of nut shaft 6 interdetach, in this way, when feeding movement, the nut couldn't be closed and couldn't drive the apron moving by lead screw.

When need threading, the handle 7 need to rotate clockwise, the summit on the nut shaft 6 locks shaft 3 and make the shaft 3 couldn't rotate in the slot; At the same time pin 4 is fetched in shaft 6 V-slot, driving the pin 5 and forcing on the pin 4, conquerring the spring force stick in the hole of shaft 2, so the shaft 2 couldn't move around, handle 1 has locked in the netural gear position. Then cutting the power transmit from the feed rod or rapid motor, and couldn't bring the feeding movement.

In this way, ensures the operating handle 1 and open and close nut handle 7 could have one in the working place, and ensures that feeding system could work normally without obstacles.

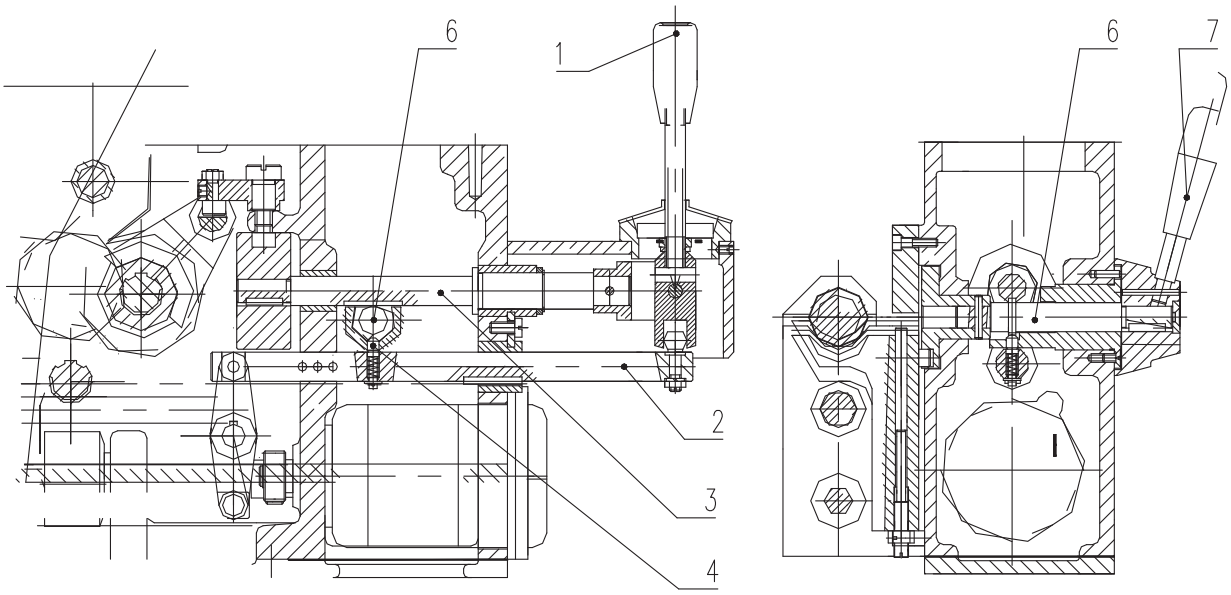

8.7 Handle protection for rapid moving

To avoid the handwheel and the mounted handle wounds the people when rapid feeding, this machine adopts the measure of handwheel disengaged when rapid feeding in handwheel of apron, and adopts safety folding handle(or folding handle) of the handwheel on the cross slide.

8.8 Pedal brake (The electromagnetic clutch is special order)

Between the leg mounts the foot plate 1, securing on the two revolution axes, which raise around the leg. The foot plate 1 and lever 2 are joined together, when the foot steps on the foot plate 1, lever 2 swings, strains the brake hoop 3, the brake scrap enclasps the brake wheel, at the same time, touch travel switch 4, make the motor power off and stop rotating, and achieve the braking purpose. When the foot leaves the foot plate, under the spring pull effect, the foot plate will resume the original place, at the same time, hoop 3 loosens the brake wheel, the travel switch 4 contact released, make the prepare for starting the motor.

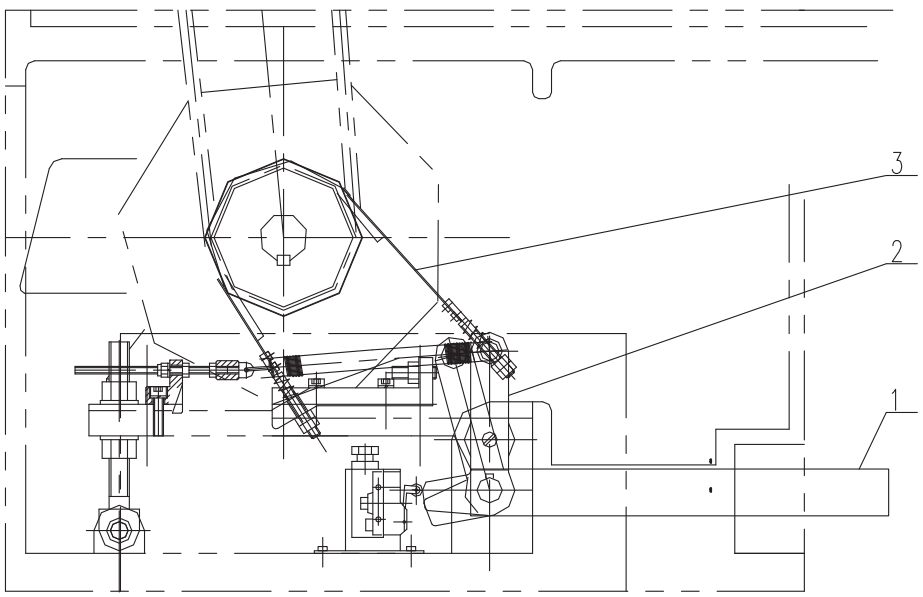

Due to the mounted with electromagnetic machine is through foot plate 1 and lever 2, touch the travel switch 4, and make the electromagnetic arrestor and the forward and reverse of spindle that the electromagnetic clutch using to interrupt, under the spring force of electromagnetic arrestor, the spindle stops rotating rapidly, and achieve the braking purpose. This time the machine's main motor still running normally.

8.9 Other safety guards

This machine provides some kinds of safety guards, such as, chip guard, chuck guard, leadscrew guard, rear guard and etc.

These protective devices cannot eliminate the danger entirely, they just can decrease the danger from splashing

Danger: The danger of chips enwind, cutting fluid splash may happen, if chip guard, leadscrew guard and rear guard are removed during operation.

If the chip guard, leadscrew guard and rear guard must be removed during cutting, the spindle speed should be low to avoid emergency occurring.

If the chuck guard is removed, the interlock switch will cut off the machine control electric circuit, so as to cut off the mains.

8.9.1 Chip guard

Push the chip guard leftward to the stop pin, and then turn to OPEN direction shown on the graph. So the guard can be opened to change the tools.

After that, turn it to CLOSE direction to close the guard. Now turning could be done by operating other handles.

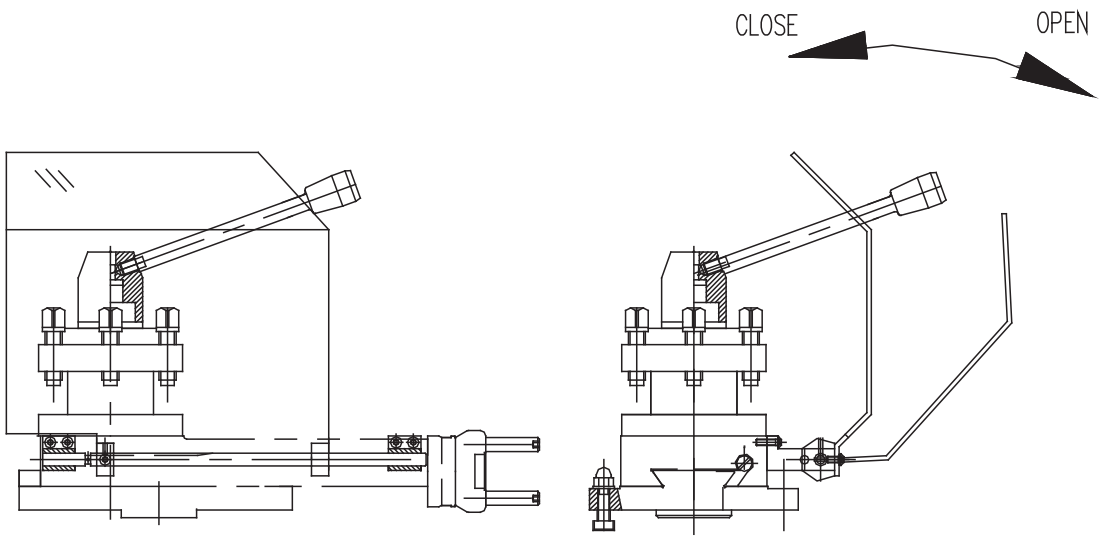

8.9.2 Chuck guard

Turn the chuck guard as spindle clockwise (OPEN) to open it, so the interlock switch will cut off the machine control electric circuit to cut off the mains. Now chuck and workpiece mounting and dismounting can be done.

Turn the chuck guard as spindle counterclockwise (CLOSE) to close it till it is in stop pin position. And the motor can be started only by other corresponding operation.

If the chuck guard is removed, the interlock switch will cut off the machine control electric circuit, so as to cut off the mains.

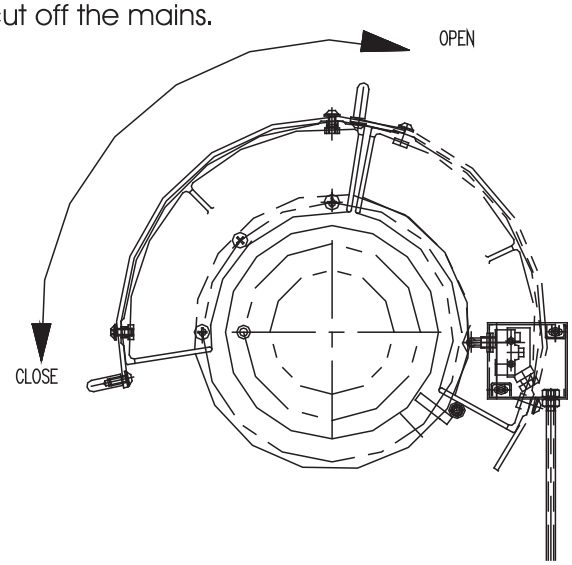

After replacing chuck guard, check the interlock switch and secure the protection cover.

8.9.3 Leadscrew cover

Please pay attention of yourself security when the leadscrew running,because the leadscrew cover will not protend you commpetely.

8.9.4 Safety door switch

There is a safety door switch on the belt cover.If open the belt cover,the main transmission system will be cut off, while belt cover is closed, the machine can be started.

8.10 Hazard alarm

Although this machine adopts many safety guard measure in order to reduce the risk, there still have some risks that couldn't avoid properly and restrict fully. So recommended to the operator to protect properly.

8.10.1 Danger from machining material

When the operator machining the cast, it will produce the dust that will bad for person, the operator should wear the respirator to protect.

When the operator will produce the gas or mirage that bad for person during machining, the operator should wear the respirator to protect, and at the same time recommended the operator to increase the smoke eliminating equipment on machine.

This machine is not used for machining the flammable and explosive material and could produce the dusty gas material, such as magnesium, lithium,and uranium,etc.

Combustible and explosive material or the material can produce toxic pollution cannot be machined

8.10.2 Objects fly off

The machine provide the shield will reduce the hazard, but it don't remove the hazards,

the operator should notice:

! Abidance the warnings on the operating precaution label;

! The workpiece should be clamped tightly;

! Never extend the holding area for clamping the workpiece;

! Spindle speed can not exceed the max. permitting chuck speed;

8.10.3 Danger from parts replacement

Because machining the shape and size of workpiece is different, need change different clamping device, such as change 3-jaw chuck to 4-jaw chuck or faceplate*if changed, the clamping device don't secure, this will cause the danger. So after changing the clamping device should inspect the following:

According to the drawing and document to check the size of things, ensure that the connecting size is right.

According to the chucking method to assemble, ensure that the chucking is firm. Test running after fitting.

9 The machine's lubrication and maintain

9.1 The maintain of machine

- After installing the machine, first add the clean lubricating oil in each box.
- The lubricating oil in each box couldn't lower than the center of oil leveler, otherwise it will damage the machine due to the wrong lubrication.
- Each lubricating point must be added the clean oil on schedule.
- Through the oil leveler of headstock, inspect the oil pump's working condition and ensure the headstock and feed stock will receive the normal lubrication.
- Inspect regularly and adjust the triangle belt's degree of tightness, the method of adjust refer to 7.2 .
- After starts the main moter each time, don't start the spindle rotate immediately. Must wait for the lubricating oil pump works normally, and the oil scale has the oil that could start the spindle.
- Inspect and clean the copper net of oil absorption filter in front leg oil tank (see the following diagram), ensure that the cleaness of lubricating oil. The cleaning approach is:

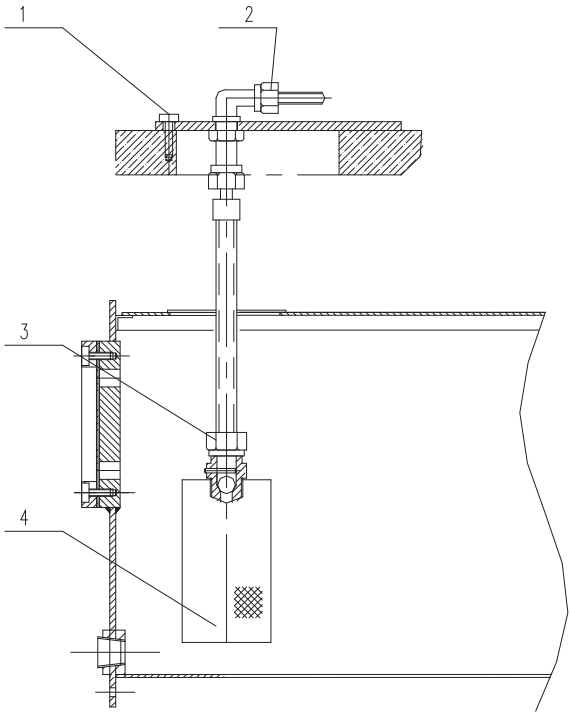

1) Cut off the main power switch, lock up the mains switch in the OFF position.
2) Open the belt door, remove the pipe junction nut 2 and bolt1;
3) Take the oil suction pipe 3 and oil filter 4 out;
4) Remove the oil filter 4 from the oil suction pipe 3;
5) Clean the oil filter 4.

- When the spindle is rotating, don't pull the speed change lever under any circumstance.
- The machine's leadscrew could use in machining thread, and ensure the precision and lifetime of them.
- When use the center rest and follow rest, must lubricate the way block surface(or bearings) that the contact with center rest, follow rest and workpiece.
- Per shift, the lubricating oil should be refilled in saddle and cross slide, ensure that when the saddle and cross slide moving, they have enough lubricating.

9.2 Lubrication

9.2.1 Headstock

Spindle bearings, headstock gearing and shafts are lubricated continuously from a distributor box located beneath the headstock top cover. This is supplied by an independently driven gear pump, and is not related to spindle speed. The oil window is in the right of the headstock to check the oil supply.

9.2.2 Gearbox

The oil returned from headstock will lubricate the gears and bearings inside the gearbox, then through oil return pipe flow into oil tank.

9.2.3 Oil tank in left plinth

The oil tank is located in the front plinth of machine, and its capacity is 12.5 litres. The oil tank should be topped up with bearing oil Mobil Velocite 10/ESSO Spinesso 15 .

9.2.4 Apron

The apron gears and bearing lubrication are splash lubricated from an integral oil bath. The oil sight glass is located in the front of the apron and the discharge hole is located in the bottom of apron. The lubricant is: MOBIL DTE 26.

9.2.5 End gear wheel

The gear of change gear bracket use the method of filling grease to lubricate.

Notice:

! Must cut off the main power when lubricating the change gear bracket.

9.2.6 The saddle, cross slide and top slide

Accord to the lubricating indication label to lubricate in each lubricating point.

9.2.7 Tailstock

Accord to the lubricating indication label to lubricate in each lubricating point.

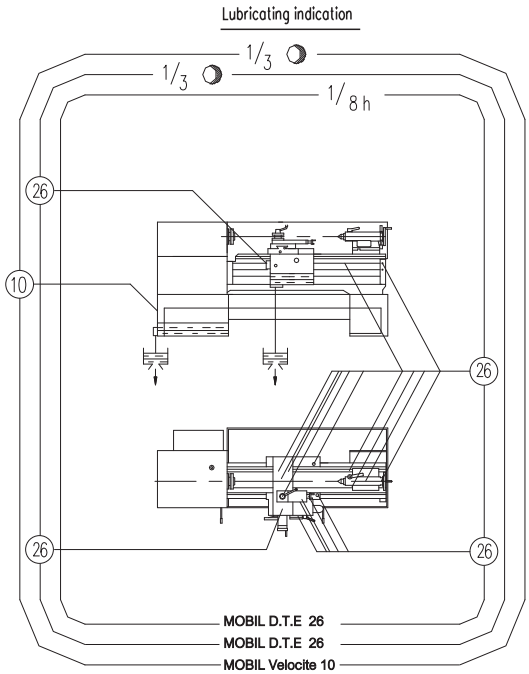

Fill the oil tank with about 12.5 liters of bearing oil MOBIL Velocite 10 once every 3 months.

Fill the apron and cross slide with about 1.5 liters of hydraulic oil MOBIL D.T.E. 26 once every 3 months.

Oil the guideways, leadscrew and tailstock and carriage with hydraulic oil MOBIL D.T.E. 26 once each shift.

10 Cutting fluid usage and cleaness

10.1 Preparation before pouring in

Before pouring in the cutting fluid, the user should read the technical information related carefully, and understand the performance norms, chemical ingredient and precautions thoroughly. Make up the cutting fluid on the basis of the method. And at the same time, confirm the whole cooling system is clean, smooth and firm.

10.2 Cutting fluid pouring in

Fill the cutting fluid from the oil pan, and flows to the coolant tank with sufficient amount.

Notice:

! It is forbidden to fill the cutting fluid from the above of the coolant pump to avoid electricity short circuit.

10.3 Cutting fluid usage

When machine the aluminum and aluminum alloy, must use the special cutting fluid. The recommended cutting fluid label is Mobil 147.

When lathe machining steel parts recommended use cutting fluid; When drilling holes, reaming, cutting thread, the cutting fluid should be used.

The method of cutting fluid usage:

Switch on the coolant pump to start it, let the nozzle of cooling pipe aim at machining place, open the valve on the cooling pipe, and make the cutting fluid has the function of cooling.

Recommended cutting fluid:Castrol HYSOL GS water-soluble cutting fluid(rotio 1:40)the technical parameter is refer to the following list:

Item	Technical parameters	Method
Appearance	Light yellow clear liquid	BAM300
Density(g/ml) ; 20°C	0.9975	IP365
pH (5% dilution degree)	9.2	BS1647
Corrosion test(5 % dilution degree)	Steel 0 %	IP287
	AL. No change	————
Foam vanishing test(Sec)	10	BS312
Application	For iron and LO-MI intension alloy, etc.	
Feature	Castrol is the cutting fluid without phenol and nitrite, and having the character of low-foaming.	

Notice: Dilution ratio can not lower than3.5% in order to keep good biological stability.

10.4 Replacing period

10.4.1 Cutting fluid replacement

Judging if the cutting fluid exceeds its shelf life by observing stratifying and strange smell (normal the shelf life is 2～3 months. For details, see technical documents of the cutting fluid.). If any phenomenon above occurs, the cutting fluid should be replaced with new one.

Replacing method:

1) Prepare one empty container, and put the nozzle of the cutting fluid into the container, then start the coolant pump. So the fluid will be discharged into the container.

2) Cut off the machine power, and switch off the coolant pump.

3) Prepare another empty container, loosen the draining plug screw 1 of the water tank(placed the leg of cooling pump, 750mm～2000mm and 2200mm are the right lathe leg, 3000mm is the middle leg), and let the cutting fluid in the container.

4) Remove the baffle 2 and bolt 3,take the water pump 4 out and clean the water tank.

5) Power on the machine, and switch on the coolant pump. Observe the cutting fluid cycle, after 3～5 minutes, if no abnormal things occurs, the cutting fluid is under normal condition.

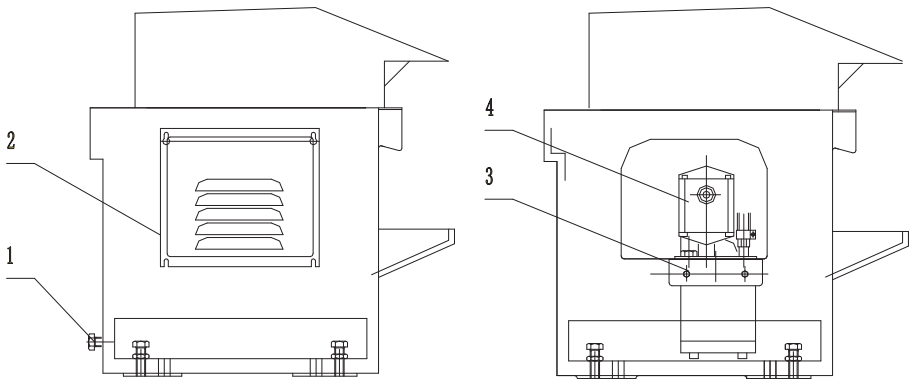

The changed waste fluid, should accord to the user's provided technical information's method to collect and dispose, and could also collect it and drain it at the appointed place.

Notice:

- Never mix up two different kinds of cutting fluid, so the cooling system should be cleaned thoroughly before replacing.
- Clean the cooling system each half year.
- Notice the coolant pump motor and the wire couldn't touch water when cleaning the cooling system
- During replacing coolant, protective gloves, goggle and ear protection should be worn.

10.4.2 Replacing period

In normal condition, cutting fluid could be used for 2 months; if exceeds should add in time or change. Because the machine's working time is different, the user should accord to the condition to add or change.

11 Check and maintenance

Machine maintenance is for keeping good working state, prolonging working life and impoving the efficiency during daily work.

11.1 Machine check & maintenance

11.1.1 Regular check

After running 500 hours later, the machine should be checked and maintained. After that, the machine could be checked and maintained every 3 months. The work should be done by the operator and the maintenance person can be a helper. Cut off the power supply before checking:

1) *Electric system*

Check the ESB for reliability and mobility;

Check the motor to see if it works normally, and if there is abnormal noise or overheat;

Check the wear of wire and cable;

Check the jog switch interlock enddoor and buttons to see if they are free to operate.

2) *Control system*

Check every switch and control lever;

Check if there is any loose of the change wheel and the clearance;

3) *Cooling and lubrication system*

If the cutting fluid and lubricant are up to the standard;

Check the level of lubricant and cutting fluid;

Lubrication state of every lubrication point;

Check if cutting fluid is dirty or lubricant deteriorates;

Check the wipper of saddle and cross slide for damage.

4) *Safety protection system*

Check the functions of safety stop of apron, chuck guard, front chip guard and splash guard.

5) *Motor*

Check the tension of the V-belt;

Check the V-belt for any damage or crack;

Check the pulley turning.

11.1.2 Common fault and removal

No.	Common faults	Cause	Removal
1	Spindle bearing is over thermal growth. Max. temperature is over 70℃, or thermal growth is over 40℃.	1. Wrong trade mark of lube; 2. The lube amount is not proper (too much or too less); 3. Clearance of spindle bearing is too small.	1. Adopting correct mark of lube; 2. Add proper amount of lube to spindle bearing; 3. Reset the spindle bearing clearance.
2	Spindle vibrates while cutting.	Clearance of front spindle bearing is too much.	Readjust front spindle bearing to reduce the clearance.
3	Clutch in headstock generates thermal and its temperature is too high (for lathe with clutch in headstock).	1. Poor lubricating, no oil supplied; 2. Clearance of clutch is too small; 3. Clearance at pin shaft of pull rod controlling clutch is too large and affect real control travel of friction disk.	1. Check oil pipes for oil supply in headstock; 2. Alter clearance of clutch in headstock; 3. Check pin shafts of pull rod of clutch. If they are worn or seriously deformed, replace them.
4	No oil in oil sight glass of headstock after starting spindle motor.	1. Low oil temperture. 2. With idle absorption occurring in lub. oil pump because of pipe leakage; 3. Filtering net is blocked by fabric etc. and oil can not be absorbed; 4. Leakage caused by too large clearance between oil pump rotor end face or shaft and sleeve due to wear; 5. Too low oil level in oil tank.	1. check the ambient temperture and oil tempertur during winter. The oil pump can not work under low temperture. 2. Check tightening condition of oil pump and pipe joints; try to use grease to do seal-check; if leakage occurs, seal it tightly; 3. Dismount oil tank, then clean or replace the oil net; 4. Repair or replace oil pump; 5. Supply enough lub. oil into oil tank.
5	When machine is running, carriage does not make feed or only moves in one direction after cross handle on right end of apron is engaged.	The L/R lever located in front of the headstock is in neutral position.	With spindle rotating forward, L/R hand lever should be at right position; with spindle reverse, the lever should be at left; it has no limit in thread cutting, but it is related to workpiece thread direction.
6	Lock position of top slide is not fixed or top slide can not be locked firmly.	1. Lock nut of top slide is loose; 2. With retardancy in rotating part of top slide.	1. Tighten lock nut; 2. Add lubricant onto rotating shaft of top slide.

11.1.3. Permissible wear of transmission part and replacement

The main transmission parts of V-belt, bearing and gear can have light wear, while replacement should be done if the following problems occur:

- Serious worn and distortion of V-belt
- Transmission noise and murmur of V-belt
- V-belt bring spindle torque low
- Recommended to replace the V-belt once a year
- Transmission noise and murmur of bearing and gear
- Machining accuracy reducing by effect of baring and gear

11.2 Machine overhaul

Under the circumstance of two shifts and comply with operation rules, the machine will carry out overhaul after running 5 years. Regulation, repair and replacing the parts should be done according to the wear of the machine parts. For overhaul, refer to Purchase Parts Instruction supplied with the parts.

After finishing the overhaul, the machine accuracy should be check as Accuracy check sheet and lever the machine.

12 Machine accessaries

Many accessories are available for end-user to select and adopt (the packing list will prevail).

12.1 Machine accessories

1.	Center	DM115;	2 pcs
2.	Center sleeve		1 pc
3.	Wrench	17;S92-3A	1 pc
4.	Wrench	16X17;	1 pc
	Wrench	18X19;	1 pc
	Wrench	22X24;	1 pc
	Wrench	27X30;	1 pc
5.	Allen key	5;	1 pc
		6;	1 pc
		8;	1 pc
		10;	1 pc
		12;	1 pc
6.	Pointed nose oil gun	80~100ml	1 pc
7.	Chuck guard		1 set
8.	Chip guard		1 set

12.2 Optional accessories

1.	3-jaw chuck	ø250 / ø315;K11	1 set
2.	4-jaw chuck	ø315/ø400	1 set
3.	Faceplate		1 pc
4.	Stationary steady	ø30~ø160	1 set
5.	Travelling steady	ø20~ø80	1 set
6.	Taper profil plate		1 set
7.	Thread dial indicator		1 set
8.	Hand pump		1 set
9.	Live center		1 set
10.	Special changewheel		1 set
11.	DRO		1 set

12.3 Taper profile device mount and usage

12.3.1 Mount

① Take off 5 screws,and move end cover

For CDS6266 lathes,should be take off the plate and 4 screws also.

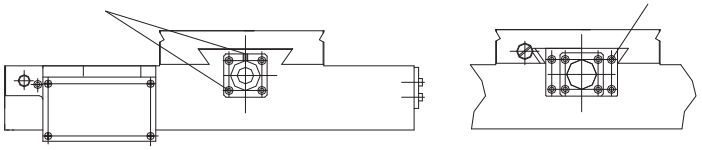

② In the positions shown ,drilling and taped 4 holes size M8X16

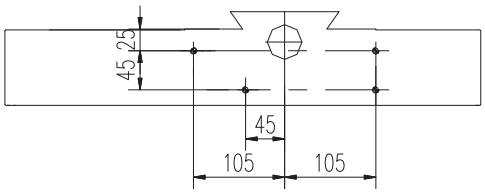

③ Use 4 screws of M8X30 for mouting taper profile device

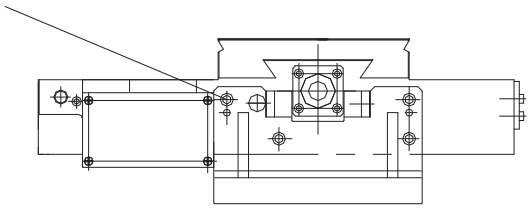

④ mouting 5 screws

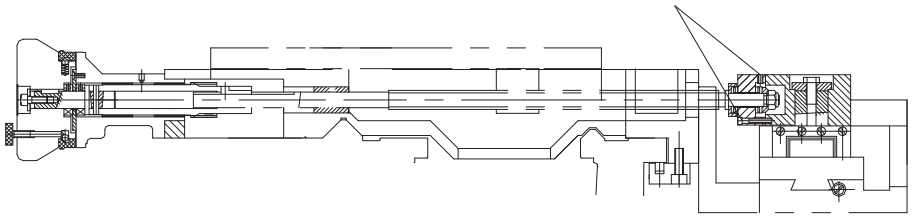

⑤ Use hand wheel move cross slide, adjust profile divice position,if smooth moving, make the screw tight.

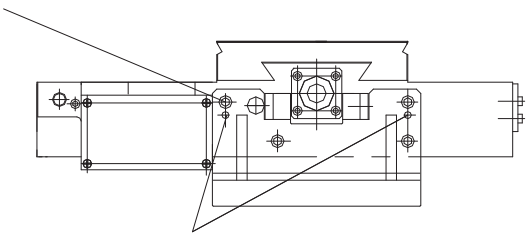

⑥ drill two holes and with 8X30 pins ,for location

12.3.2 Usage

1) Cut off the machine power supply;
2) Clamp the workpiece;
3) Loose screw 1 and 2,and adjsut 6 to the mark on the gauge 3 by handle 8.
4) Tighten 1 and 2;
5) Move the saddle (tool post) to the workpiece by apron handwheel;
6) Mount fixed plate 9 and pull rod 4, then fasten it by bolt 5;
7) Choose proper spindle speed feed rate, then start the main motor;
8) Move the top slide to the position for cutting by cross handwheel 10 and spron handwheel;
9) Start the spindle through the third shaft, and select the feed direction by means of apron
10) If there is error with the taper,cut off the power, then repeat steps 3)~9) till the taper is right.

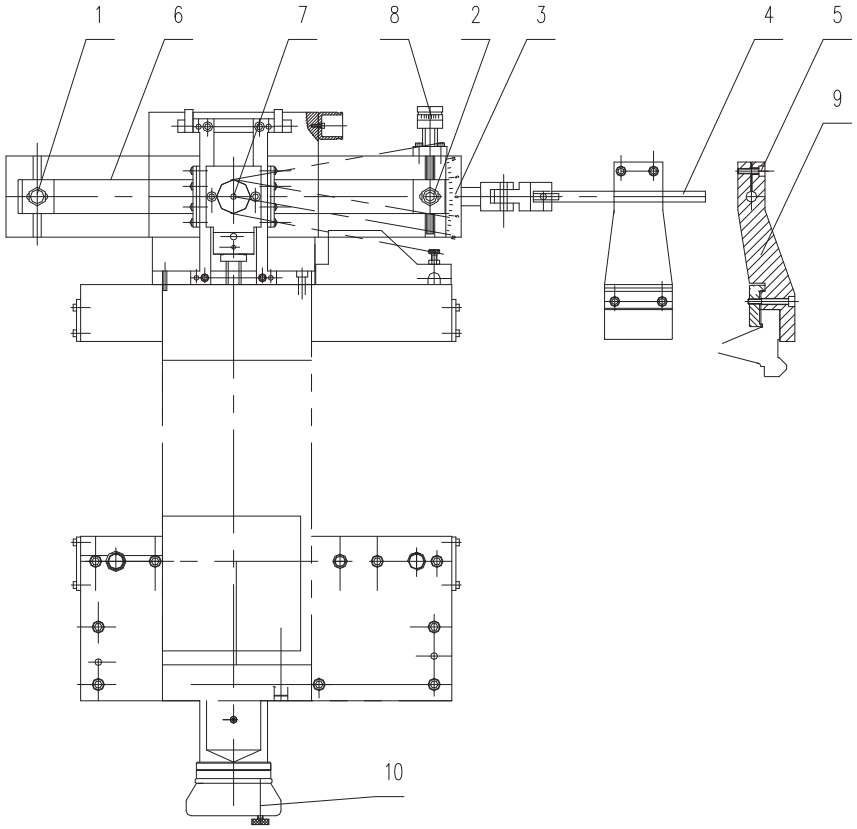

12.4 Steady rest and follower rest

12.4.1 Steady rest

Before installing the steady rest, cut off the mains, and lock at the OFF position.

Put the steady rest on the bed, then fix it in a proper position by nut and clamp plate;

Ensure the steady of steady rest;

Turn the knob on steady rest by hand to reach and support the workpiece;

Add lubrication on contact.

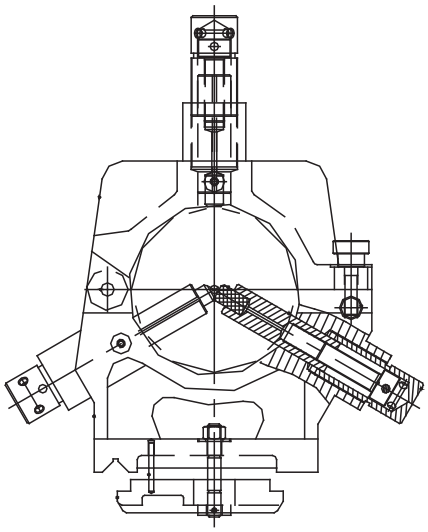

Before removing the center rest, cut off the mains, and lock at the OFF position; Unscrew the nut, then take the rest off the machine.

12.4.2 Follower rest

Before installing the follower rest, cut off the mains, and lock at the OFF position.Put the follower rest on the saddle, then fix it on the saddle by the bolt;
Secure the follower rest;

Turn the knob on follower rest by hand to reach and support the workpiece;
Add lubrication on contact.

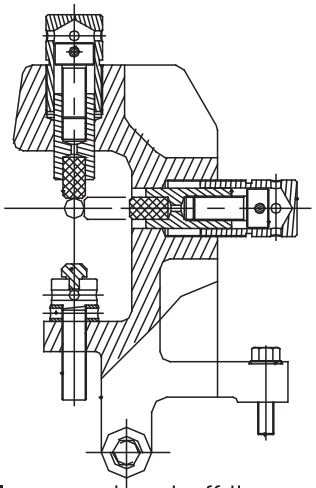

Before removing the follower rest, cut off the mains, and lock at the OFF position;Unscrew the bolt, then take the rest off the machine.

12.5 DRO

Use, maintain and service as the Operating Manual supplied by DRO manufacturer.

13 Electric system

13.1 Control system

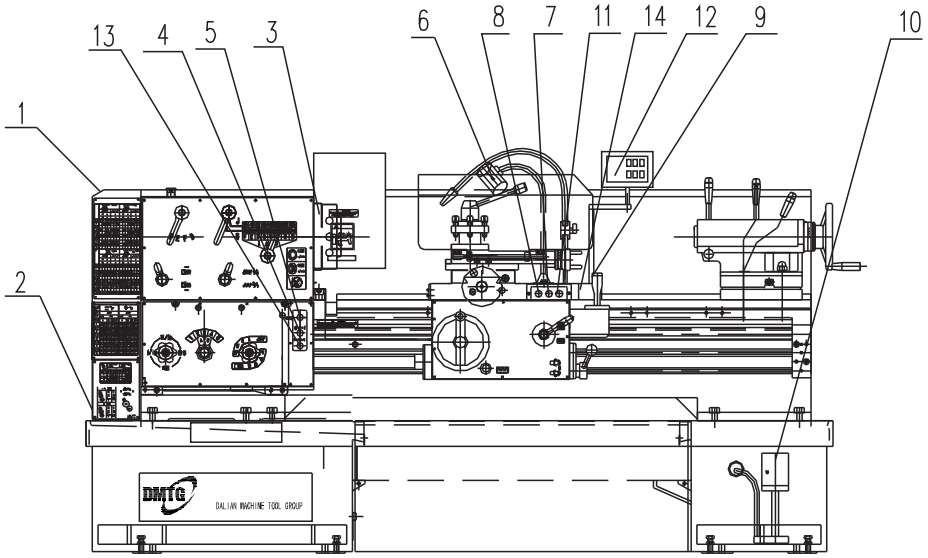

1. Power off switch (without electric cabinet)
2. Belt cover switch
3. Chuck guard switch (option)
4. Coolant pump knob
5. ESB
6. Work lamp
7. Spindle motor start
8. ESB
9. Rapid travel button
10. Coolant pump motor
11. Stop button
12. ERO meter (for special order)
13. Brake release button (with solenoid clutch)

See attached table E1

Note: For electric system instruction, refer to page 72--77;
For electric diagram and the details, refer to page 78--84.

Machine with DRO

This machine is added a set to DRO device based on CDS horizontal lathe (special order).

Before operating the machine with DRO, please read the documents supplied with this machine such as DRO Operating Manual. Use the DRO as showed in the Manual.

Attached table E1

Ser. No.	Code	Type	Name	Specification	Qty	Usage	Remarks
1	QF	DZ15B-40/3902	Power switch	Rated current 40A	1	power on/off	with power protection cover; no E/cabinet
2	SQ1	D4DS-25FS	Belt cover switch		1	Belt cover guards	There are two serial switches
4	SB2	XB2-BD21C	Coolant pump knob	Black	1	Coolant pump start/stop	Schneider
5	SB4	XB2-BS542C	Button	Red; with ø40 emergency stop ring	1	Emergency stop	Schneider
6	EL	JC11A	Halogen lamp	AC24V 50W	1	For illumination	Schneider
7	SB3	XB2-BA11C	Button	White	1	Spindle motor start	Schneider
8	SB5	XB2-BA22C	Button	Black	1	Spindle motor stop	Schneider
9	SB2	LA9TH	High-speed button	Black	1	Rapid travel	
10	EL	YSB-25	Coolant pump motor	Black	1	Cooling	
13			DRO		1		
14	SB6	XB2-BS542C	Button	Red; with ø40 emergency stop ring	1	Emergency stop	Schneider
15	SB7	XB2-BA21C	Button	Black	1	Brake release	Schneider

Note: For some specific electric components, please refer to objects.

13.2 Brief introduction to electric system

1) Power voltage and frequency

This machine according to customer order contract can provide the following power voltage and frequency:

Frequency	Normal mode voltage								
50Hz 60Hz	~220V	~380V	~415V	~420V	~440V	~560V	~600V	~220V/440V 60Hz	~230V/460V 60Hz

2) The allowance surging zone of voltage and frequency

Voltage:the steady-state voltage is 0.9~1.1 time of rated voltage.

Frequency:the steady-state frequency is 0.99~1.01 time rated frequency (continuous work)

Frequency:the steady-state frequency is 0.98~1.02 time rated frequency (short time work)

3) Harmonic wave

The sum of 2~5 deformation harmonic wave can't exceed 10% of the average square root; Due to the sum of 6~30 deformation harmonic wave can't exceed 2% of the average square root.

4) Unbalance voltage

The component of negative sequency and zero sequence in three-phase power voltage don't exceed the 2% component of positive sequence.

5) Voltage break

During the power period's randoom time, the duration of power break or zero voltage don't exceed 3ms, the pitch time should more than 1s.

6) Potential drop

The potential drop should not exceed more than 1 period which the 20% of power peak voltage. The apart fall pitch time should more than 1s.

7) Control loop voltage

The control voltage of this series machine is ~24V,~110V which is special order; Illumination voltage is ~24V,~110V which is special order;Scale ring illumination voltage is ~5V. With digital readout , ERO power voltage is ~220V,~110V which is the special order.

8) Transmission mechanism

For machine mechanism transmission provide the motive force, the machine has the following motor

Code	Model	Name	Power	Application
M1	YA132M-4B3	Spindle Motor	7.5 (11KW)	Control spindle turning
M2	YSS2-5634	Rapid motor	275W	Travel in cross and longitudinal direction
M3	AJB-25	Coolant pump motor	125W	Control coolant motor

13.3 Electric system mount (See electric control system diagram)

13.3.1 Power lead-in

The customer should load the proper fuse and breaker before the power lead-in, and equip with over-voltage defender. The power through power switch QF into machine, the lead-in of power should provide by user. The HOTRN cable conductor 4 core (3-phase 4-conductor) or 5 core (3-phase 5-conductor) and the section is 6mm^2 380V and cold press terminal are suggested , and connect to the connecting terminal L1, L2 and L3 in niche XT1 . The safety protection grade of lead in should be at least IP54.The cross section of guard earthing wire shouldn't less than the phase cross section. The user accord to network voltage provide the main lead's section and fuse core or breaker's rated current please refer to the following list.

The main lead section list

Rated voltage / Motor power	~220V , ~230V	~380V , ~415V,~420V,~440V , ~460V	~560V,~600V
7.5kW	6mm^2	6mm^2	4mm^2
11kW(special order)	10mm^2	6mm^2	6mm^2

The normal current list of fuse core or breaker

Rated voltage / Motor power	~220V , ~230V	~380V	~415V,~420V,~440V , ~460V	~560V,~600V
7.5kW	80A	50A	40A	30A
11kW(special order)	100A	50A	50A	40A

13.3.2 Power phase check

After the installation, make the operating handle in the middle position, pull the main power switch QF to ON to connect the power, press the white button in the saddle to start the main motor, pull the operating handle upwards, if spindle forwards, it shows phase sequence is right, otherwise,need change any two pieces of phase wire in power circuit.

13.3.3 Space for maintenance

The space for maintenance should keep 600mm maintenance space from the machine outside, undersize space will bring the difficulity at maintenance.

13.4 Machine electric system and operation (See Machine circuit diagram)

13.4.1 Preparation before machine start

- Use special tool to open the door of E/cabinet, check the breaker or the thermal relay and miniature break to see if they connect, check each connecting terminal to see if it

connects reliably, fastening the loose terminals. After the inspection, close the electric cabinet door.

- Close the chuck protective cover (special order), belt protective door.
- Ensure the ESB is in the modle of release, and coolant pump button is on "O".The operation lever is in the neutral position.

13.4.2 Start the lathe

For the machine without electric cabinet, pull the power switch upwords int the front side of change gear cover to ON position to connect the power. For the electric cabinet,the machine power switch and electricbox door have interlock structure, this switch must in disjunction could open the door. Pull the rotary operator handle to ON position to connect the power. When need with electric observe or overhaul the electric element, open the door pull the power switch to the ON position, this time should notice the safety to avoid shock.

13.4.3 Main motor of clutch start and stop

When the operator lever in the neutral position, SQ5 and SQ6 are both close point, can start the main motor. Press the white start button SB3 in the saddle, contactor KM1 energize engaging, main motor M1 rotary;Press the red emergency stop buttonSB5, KM1 power off releasing, main motor M1 stop rotating. When the operating lever pull upwards to close the open point SQ5, spindle forward clutch YC2 energized, the spindle start to forward; When the operating handle pull downwards to close the open point SQ6, the spindle forward clutch YC2 power off, the spindle reverse clutch YC3 energized, the spindle start to reverse. There is interlock contact protection between the spindle forward and reverse clutch. When the spindle operating lever it pulled to the middle position, YC2 and YC3 are both power off, break solenoid clutch YC1 acts, this time the spindle stops.

The spindle break is interrupt break, so in the headstock control panel has the break release button SB7, only to press this black button SB7, the spindle could be turned by hand, but notice that don't touch this button randomly.

Notice: To avoid main motor M1 overload running, breaker QM1 or thermal relay FR1,before delivery the set value is according to the main motor nameplate's rated current to set. In normal condition, don't adjust it under special situation microadjustment could be cone by the professional authorized persons.

13.4.4 Coolant pump start and stop

After the main motor starting, coolant pump M3 can be started. Pull the black knob SB2 of control panel in front of the headstock turn to the position 1, KM3 energized, coolant pump M3 rotating; SB2 turn to the position 0, KM3 power off release, the coolant pump M3 stops rotating.

While saddle is feeding longitudinally or moving rapiddly by means of cross lever, the apron handwheel will disengage automatically and stop turning. When cross lever is in the middle position, the apron handwheel can move the saddle in longitudinal direction.

5.5.8 Saddle lock

Lock the saddle on the bed way by locking screw (22) to avoid saddle moving at will on the bed. Before delivery, the locking screw (22) is locked to avoid saddle sliding during transportation.

Notice:

Loose the screw (22) after unpacking. Then the saddle can be moved, or machine may be damaged.

5.5.9 Apron adjusting

In the flange of left side of apron, there is one set of overload safety clutches. If the feed force exceed the set load, the safety clutch will enable tool post to stop feeding. The spring pressure decides transfer load. Before delivery, the pressure has beed set, but the user can adjust it as needed. The adjusting steps are as follows:firstly remove the apron left cover E, and run the spindle in low speed, adjust the bolt F by spanner. So the pressure of spring G can be adjusted at the same time so as to adjust the transfer load of safety clutch. When the feed force exceed the set load, clutch H can not run in company with inner taper bush J. so the movement from the feed rod will stop at the position of H and J.

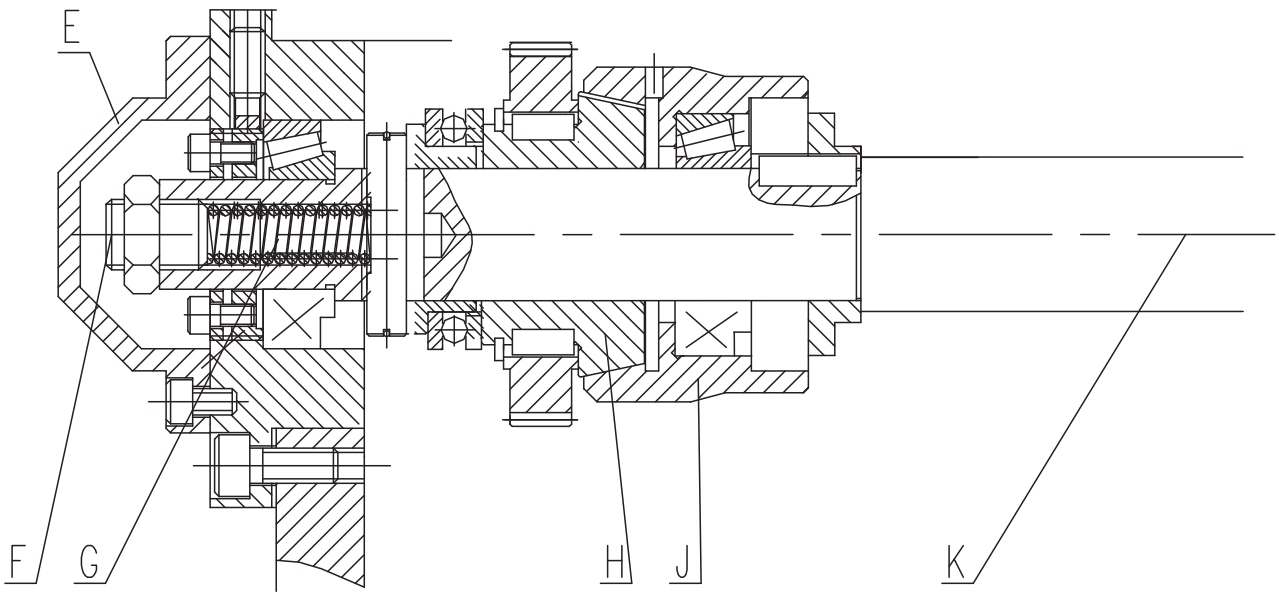

5.5.10 Tailstock

The tailstock clamp lever (19) can clamp quickly the tailstock in the bed slideway to prohibit tailstock moving while finish turn and semi finish turn. Additionally, when rough turn or other heavy load cutting, the tailstock lock nut (24) shall be also locked. The tailstock barrel lock lever (18) is used to lock the tailstock barrel. When tailstock is used to turn taper components, the screws (C) in both sides of tailstock should be adjusted at the same time, so the tailstock can move the required distance transversely, next lock the lever (19) and screw (C).

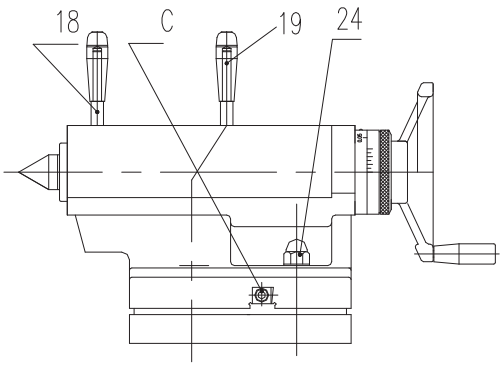

5.5.11 Dismount/remount gap piece

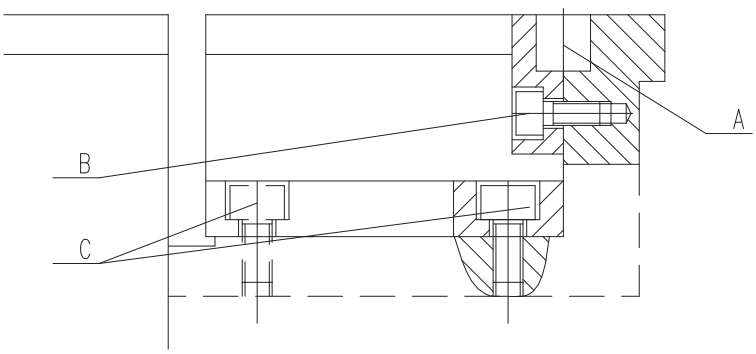

Procedures of dismounting gap piece:
1. Clean the area around the gap piece;
2. Take off the shear pin A;
3. Take off the screw B;
4. Remove the screw C;
5. Take off the leadscrew cover;
6. Remove the gap piece.

Procedures of remount the gap piece:
1. Clean the mating faces of gap piece to keep it clean;
2. Guarantee the machine bed in required level state;
3. Move slightly the gap piece to the mounting position;
4. Fit screw B and cylindrical pin A, then aligh them carefully with hide hammer;
5. Tighten screw C and B.

6 Change wheel and thread list

6.1 Change wheel

Normally the machine can make turning and various thread cutting without changing the change wheels. The change wheels are only to be changed when cutting special threads.

The change wheels should be changed in the following circumstances:

Cutting imperial threads of 11 1/2 t.p.i., 13t.p.i. and 19 t.p.i. ;

Cutting metric threads of which pitches are more than 80mm or cutting metric threads of special pitches;

In the case of the maine CDS6240C、CDS6250C、CDS6256C、CDS6266C、CDS6276C, if multiplying pitch function is adopted.

When the feed function is being used are the same as those with the normal pitches being used.

6.1.1 Metric lathe

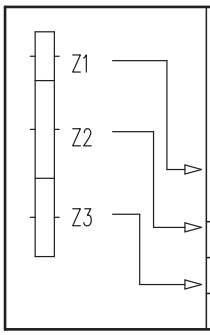

CDS6240A	CDS6240B CDS6250B CDS6256B CDS6266B CDS6276B	CDS6240C CDS6250C CDS6256C CDS6266C CDS6276C	
		1/1 Basic pitch	8/1 Multiplied pitch
36	36	27	36
69(72)	57(69)	57(69)	57(69)
54	72	72	72

6.1.2 Imperial lathe:

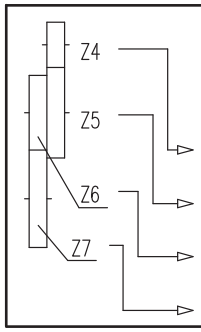

CDS6240A	CDS6240B CDS6250B CDS6256B CDS6266B CDS6276B	CDS6240C CDS6250C CDS6256C	CDS6266C CDS6276C
		1/1 Basic pitch	8/1 Multiplied pitch
39	39	29	39
57	76	76	76
58	58	52	58
63	63	56	63

Note: For CDS6240C 、 CDS6250C、CDS6256C、CDS6266C、CDS6276C when the basic pitch is changed into the multiplied pitch , the change gears in the change gear train should be changed no matter the master leadscrew is metric or imperial leadscrew.

For other CDS lathes when the basic pitch is changed into the multiplied pitch, the change gears will not be changed.

6.1.3 Metric change wheel list (including options):

Teeth	Module	Machine model									No.
Z27	2			CDS6240C		CDS6250C		CDS6266C		CDS6276C	28112
Z36	2	CDS6240A	CDS6240B	CDS6240C	CDS6250B	CDS6250C	CDS6266B	CDS6266C	CDS6276B	CDS6276C	28104
Z48	2	CDS6240A									28106
Z54	2	CDS6240A	CDS6240B	CDS6240C	CDS6250B	CDS6250C	CDS6266B	CDS6266C	CDS6276B	CDS6276C	28105
Z57	2	CDS6240A	CDS6240B	CDS6240C	CDS6250B	CDS6250C	CDS6266B	CDS6266C	CDS6276B	CDS6276C	28502
Z69	2	CDS6240A	CDS6240B	CDS6240C	CDS6250B	CDS6250C	CDS6266B	CDS6266C	CDS6276B	CDS6276C	28501
Z72	2		CDS6240B	CDS6240C	CDS6250B	CDS6250C	CDS6266B	CDS6266C	CDS6276B	CDS6276C	28101
Z78	2	CDS6240A	CDS6240B	CDS6240C	CDS6250B	CDS6250C	CDS6266B	CDS6266C	CDS6276B	CDS6276C	28116

Machine model	CDS6256C	CDS6256B CDS6256C					
Teeth	Z27	Z36	Z54	Z57	Z69	Z72	Z78
Module	2.25	2.25	2.25	2.25	2.25	2.25	2.25
No.	B28102	B28103	B28105	B28503	B28501	B28101	B28109

6.1.4 Imperial change wheel list (including options):

Teeth	Module	Machine model									No.
Z29	2			CDS6240C		CDS6250C		CDS6266C		CDS6276C	28113
Z32	2	CDS6240A									28111
Z36	2			CDS6240C		CDS6250C		CDS6266C		CDS6276C	28104
Z39	2	CDS6240A	CDS6240B	CDS6240C	CDS6250B	CDS6250C	CDS6266B	CDS6266C	CDS6276B	CDS6276C	28108
Z48	2		CDS6240B	CDS6240C	CDS6250B	CDS6250C	CDS6266B	CDS6266C	CDS6276B	CDS6276C	28106
Z52	2			CDS6240C		CDS6250C		CDS6266C			28114
Z56	2			CDS6240C		CDS6250C		CDS6266C			28115
Z57	2	CDS6240A	CDS6240B	CDS6240C	CDS6250B	CDS6250C	CDS6266B	CDS6266C	CDS6276B	CDS6276C	28502
Z58	2	CDS6240A	CDS6240B	CDS6240C			CDS6266B	CDS6266C	CDS6276B	CDS6276C	28109
Z63	2	CDS6240A	CDS6240B	CDS6240C			CDS6266B	CDS6266C	CDS6276B	CDS6276C	28110
Z69	2	CDS6240A	CDS6240B	CDS6240C	CDS6250B	CDS6250C	CDS6266B	CDS6266C	CDS6276B	CDS6276C	28501
Z76	2		CDS6240B	CDS6240C	CDS6240B	CDS6250C	CDS6266B	CDS6266C	CDS6276B	CDS6276C	28503
Z58	2.25				CDS6250B	CDS6250C	CDS6256B	CDS6256C			A28511
Z63	2.25				CDS6250B	CDS6250C		CDS6256C			A28119
Z52	2.5					CDS6250C		CDS6256C			A28512
Z56	2.5					CDS6250C		CDS6256C			A28120
Z29	2.5						CDS6256B	CDS6256C			B28104
Z36	2.25							CDS6256C			B28103
Z48	2.25						CDS6256B	CDS6256C			B28106
Z72	2.25						CDS6256B	CDS6256C			B28101
Z39	2.5						CDS6256B	CDS6256C			B28107
Z76	2.5						CDS6256B	CDS6256C			B28502
Z57	2.25						CDS6256B	CDS6256C			B28503
Z69	2.25						CDS6256B	CDS6256C			B28501

6.1.5 Metric change wheel for special thread(special order for some gears):

T. P. I.	CDS6240A	CDS6240B	CDS6240C	CDS6250B CDS6256B	CDS6250C CDS6256C
11 1/2	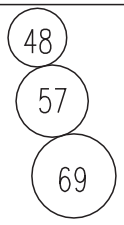	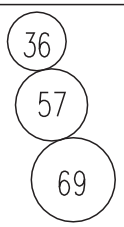	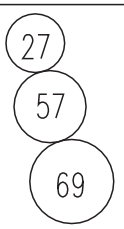	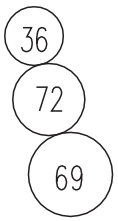	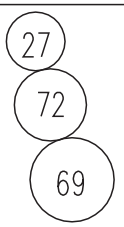
13	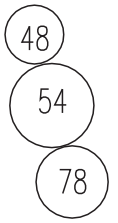	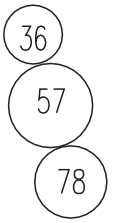	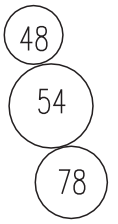	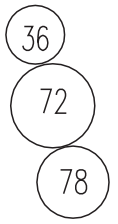	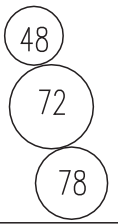
19	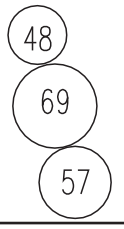	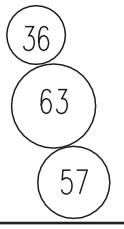	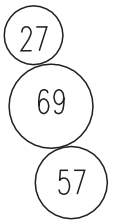	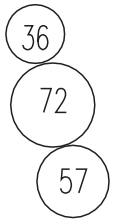	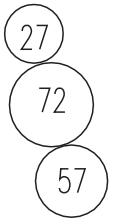

T. P. I.	CDS6266B	CDS6266C	CDS6276B	CDS6276C
11 1/2	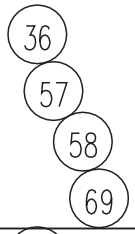	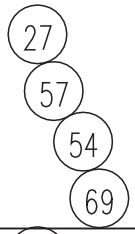	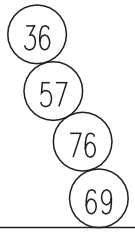	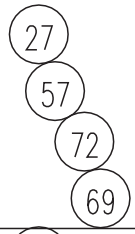
13	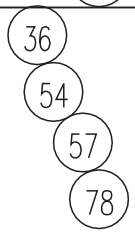	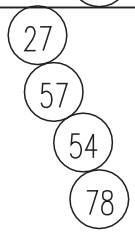	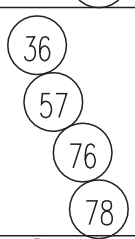	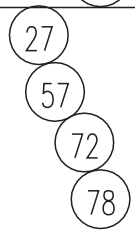
19	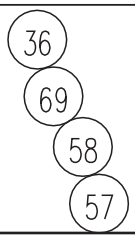	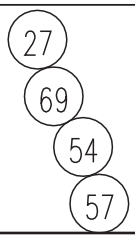	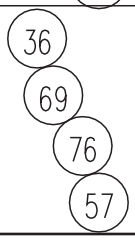	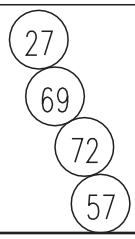

6.1.6 Imperial change wheel for special thread(special order for some gears):

T. P. I.	CDS6240A	CDS6240B	CDS6240C	CDS6250B CDS6256B	CDS6250C CDS6256C
11 1/2	32 57 69	48 58 69	36 63 69	48 76/72 69	36 76 69
13	64 54 39	48 76 39	48 69 52	48 76/72 39	48 76 52
19	32 69 57	48 58 57	48 63 57	48 76/72 57	48 76 57

T. P. I.	CDS6266B	CDS6266C	CDS6276B	CDS6276C
11 1/2	48 57 58 69	36 57 58 69	48 57 76 69	36 57 76 69
13	48 57 58 39	48 57 58 52	48 57 76 39	48 57 76 52
19	48 69 58 57	36 69 58 57	48 69 76 57	36 69 76 57

6.2 Thread list

6.2.1 thread list for metric lathe:

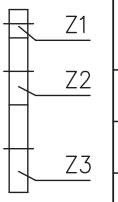		mm				mod				in				DP			
		H		L		H		L		H		L		H		L	
		G		J		G		J		G		J		G		J	
A	B	V	VII	VI	VIII	V	VII	VI	VIII	V	VII	VI	VIII	V	VII	VI	VIII
1			0.875	1.75	3.5		0.4375	0.875	1.75								
3	1									80	40	20	10	160	80	40	20
2		0.5	1	2	4	0.25	0.5	1	2	72	36	18	9	144	72	36	18
1	4			2.75	5.5				2.75								
3		0.75	1.5	3	6	0.375	0.75	1.5	3	48	24	12	6	96	48	24	12
2	5									44	22	11	5 1/2	88	44	22	11
4		1.125	2.25	4.5	9		1.125	2.25	4.5	32	16	8	4	64	32	16	8
5	3	1.25	2.5	5	10		1.25	2.5	5								
5										28	14	7	3 1/2	56	28	14	7

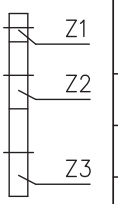		mm				mod				in				DP			
		L				L				L				L			
		J				J				J				J			
A	B	V	VII	VI	VIII	V	VII	VI	VIII	V	VII	VI	VIII	V	VII	VI	VIII
1		3.5	7	14	28	1.75	3.5	7	14								
3	1									10	5	2 1/2	1 1/4	20	10	5	2 1/2
2		4	8	16	32	2	4	8	16	9	4 1/2	2 1/4	1 1/8	18	9	4 1/2	2 1/4
1	4	5.5	11	22	44	2.75	5.5	11	22								
3		6	12	24	48	3	6	12	24	6	3	1 1/2	3/4	12	6	3	1 1/2
2	5									5 1/2	2 3/4	1 3/8	11/16	11	5 1/2	2 3/4	1 3/8
4		9	18	36	72	4.5	9	18	36	4	2	1	1/2	8	4	2	1
5	3	10	20	40	80	5	10	20	40								
5										3 1/2	1 3/4	7/8	7/16	7	3 1/2	1 3/4	7/8

6.2.2 Thread list for imperial lathe:

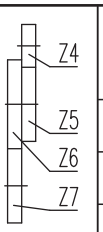

		mm				mod				in				DP			
		H		L		H		L		H		L		H		L	
		G		J		G		J		G		J		G		J	
A	B	V	VII	VI	VIII	V	VII	VI	VIII	V	VII	VI	VIII	V	VII	VI	VIII
1				1.75	3.5				1.75								
3	1									80	40	20	10	160	80	40	20
2		0.5	1	2	4	0.25	0.5	1	2	72	36	18	9	144	72	36	18
1	4			2.75	5.5				2.75								
3		0.75	1.5	3	6		0.75	1.5	3	48	24	12	6	96	48	24	12
2	5									44	22	11	$5\frac{1}{2}$	88	44	22	11
4			2.25	4.5	9			2.25	4.5	32	16	8	4	64	32	16	8
5	3	1.25	2.5	5	10		1.25	2.5	5								
5										28	14	7	$3\frac{1}{2}$	56	28	14	7

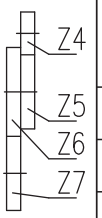

		mm				mod				in				DP			
		L				L				L				L			
		J				J				J				J			
A	B	V	VII	VI	VIII	V	VII	VI	VIII	V	VII	VI	VIII	V	VII	VI	VIII
1		3.5	7	14	28	1.75	3.5	7	14								
3	1									10	5	$2\frac{1}{2}$	$1\frac{1}{4}$	20	10	5	$2\frac{1}{2}$
2		4	8	16	32	2	4	8	16	9	$4\frac{1}{2}$	$2\frac{1}{4}$	$1\frac{1}{8}$	18	9	$4\frac{1}{2}$	$2\frac{1}{4}$
1	4	5.5	11	22	44	2.75	5.5	11	22								
3		6	12	24	48	3	6	12	24	6	3	$1\frac{1}{2}$	$\frac{3}{4}$	12	6	3	$1\frac{1}{2}$
2	5									$5\frac{1}{2}$	$2\frac{3}{4}$	$1\frac{3}{8}$	$\frac{11}{16}$	11	$5\frac{1}{2}$	$2\frac{3}{4}$	$1\frac{3}{8}$
4		9	18	36	72	4.5	9	18	36	4	2	1	1/2	8	4	2	1
5	3	10	20	40	80	5	10	20	40								
5										$3\frac{1}{2}$	$1\frac{3}{4}$	7/8	$\frac{7}{16}$	7	$3\frac{1}{2}$	$1\frac{3}{4}$	7/8

6.2.3 Special thread list for metric lathe

Special thread table after change wheel for metric leadscrew with pitch 12mm (for machining 3-start threads):

		mm				mod			
		L		J		8/1			
A	B	V	VII	VI	VIII	V	VII	VI	VIII
1			5.25	10.5	21			5.25	10.5
1	4		8.25	16.5	33			8.25	16.5
4		6.75	13.5	27	54		6.75	13.5	27
5	3	7.5	15	30	60	3.75	7.5	15	30

6.2.4 Fine thread for metric lathe

When adopting fine thread for metric leadscrew with pitch 12mm, the metric/module threads can be converted as follows(optional change gear):

ZA / ZB		mm				mod			
		H L				H L			
		G J				G J			
A	B	V	VII	VI	VIII	V	VII	VI	VIII
1		0.35	0.7	1.4	2.8		0.35	0.7	1.4
2		0.4	0.8	1.6	3.2	0.2	0.4	0.8	1.6
1	4	0.55	1.1	2.2	4.4		0.55	1.1	2.2
3		0.6	1.2	2.4	4.8	0.3	0.6	1.2	2.4
4		0.9	1.8	3.6	7.2	0.45	0.9	1.8	3.6

Change wheel for fine thread \ Model	CDS6240A	CDS6240B CDS6250B CDS6256B CDS6266B CDS6276B	CDS6240C CDS6250C CDS6256C CDS6266C CDS6276C
ZA	45	45	30
ZB	54	72	64

6.3 Dial thread indicator

The dial thread indicator is optional accessory, which is ordered by customer.The machine do not mount the dial thread indicator when delivery.

Notice: Although protective guard has been used above dial thread indicator, the operator may have the danger of being squeezed or fouled.So recomment the user add additional guard and pay special attention.

6.3.1 Mounting:

The thread cutting indicator is mounted on the front-right side of saddle and fixed on theright side of saddle with screw A. When the master leadscrew is at a standstill, engage thesplit nut. Loosen the screw A to make the thread cutting indicator inclined and engagedwith the master leadscrew; tighten screw A. Loosen the screw B to make the referencefig of the thread cutting indicator be aligned with a mark line on the plate of the threadcutting indicator; tighten screw B; up to now, disengage the split nut, and move thesaddle to a proper position for cutting threads.

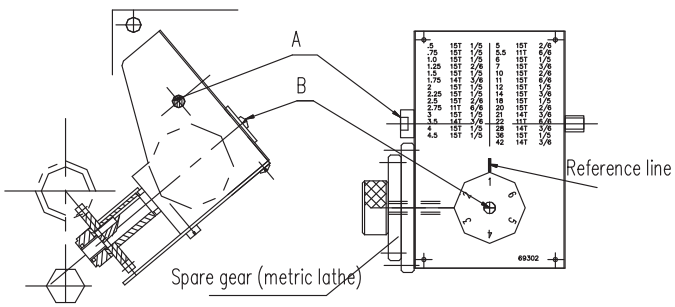

6.3.2 Purpose:

When the pitch of master leadscrew is not the whole multiples of workpiece pitch, thethread cutting indicator should be used for preventing mistake of thread cutting. Engagethe split nut when both the master leadscrew and workpiece turn whole number revolutionsby means of the thread cutting indicator to ensure a correct thread cutting.

6.3.3. Usage:

Find out the number of graduations which the thread cutting indicator should be turned inthe pitch list as per the workpiece pitch. When cutting thread each time later, it meedsonly to engage the split nut when the reference line alighs with the graduation number thethread cutting indicator turned, and no mistake will occur.

When the thread cutting indicator is not in use, loosen the lock screw B and lift the threadcutting indicator to make it disengaged from the master leadscrew. For the machinewhose headstock is with friction clutch, the spindle forward/reverse and tool withdrawalfor thread cutting, can be realized by operating the 3rd shaft lever without disengaging thesplit nut, so here we needn't thread cutting indicator; additionally, the reverse lever in theheadstock can also be operated to realize the above mentioned movements.

1) When master leadscrew is of 12mm metric leadscrew:

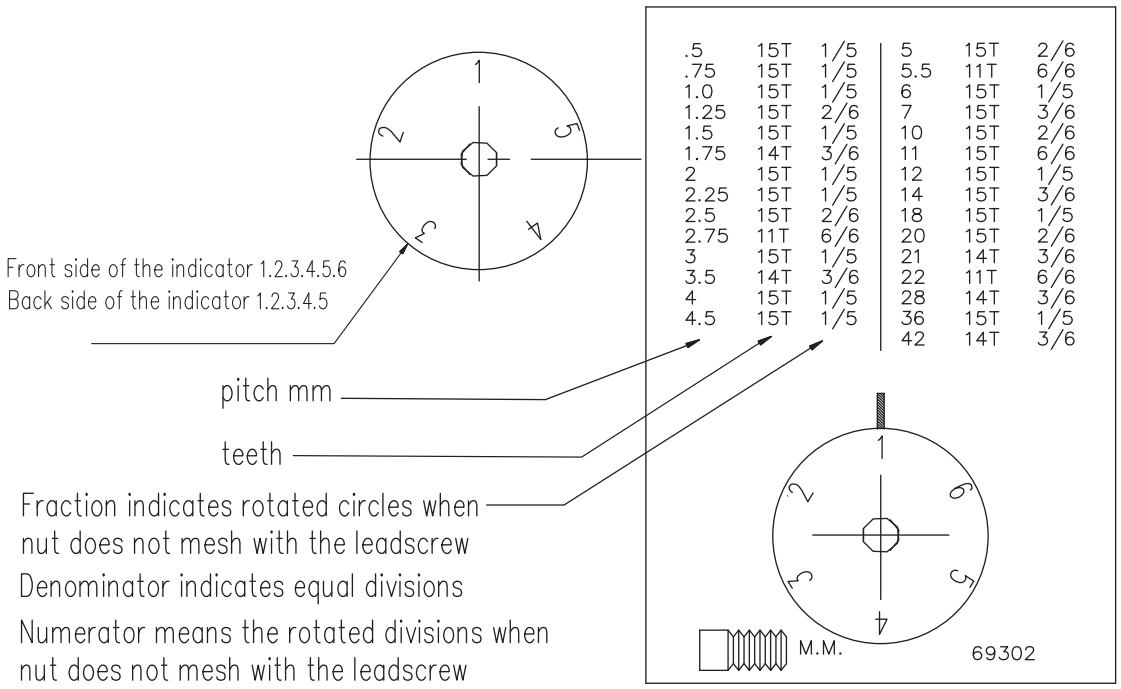

.5	15T	1/5	5	15T	2/6
.75	15T	1/5	5.5	11T	6/6
1.0	15T	1/5	6	15T	1/5
1.25	15T	2/6	7	15T	3/6
1.5	15T	1/5	10	15T	2/6
1.75	14T	3/6	11	15T	6/6
2	15T	1/5	12	15T	1/5
2.25	15T	1/5	14	15T	3/6
2.5	15T	2/6	18	15T	1/5
2.75	11T	6/6	20	15T	2/6
3	15T	1/5	21	14T	3/6
3.5	14T	3/6	22	11T	6/6
4	15T	1/5	28	14T	3/6
4.5	15T	1/5	36	15T	1/5
			42	14T	3/6

2) When master leadscrew is of 2TPI imperial leadscrew:

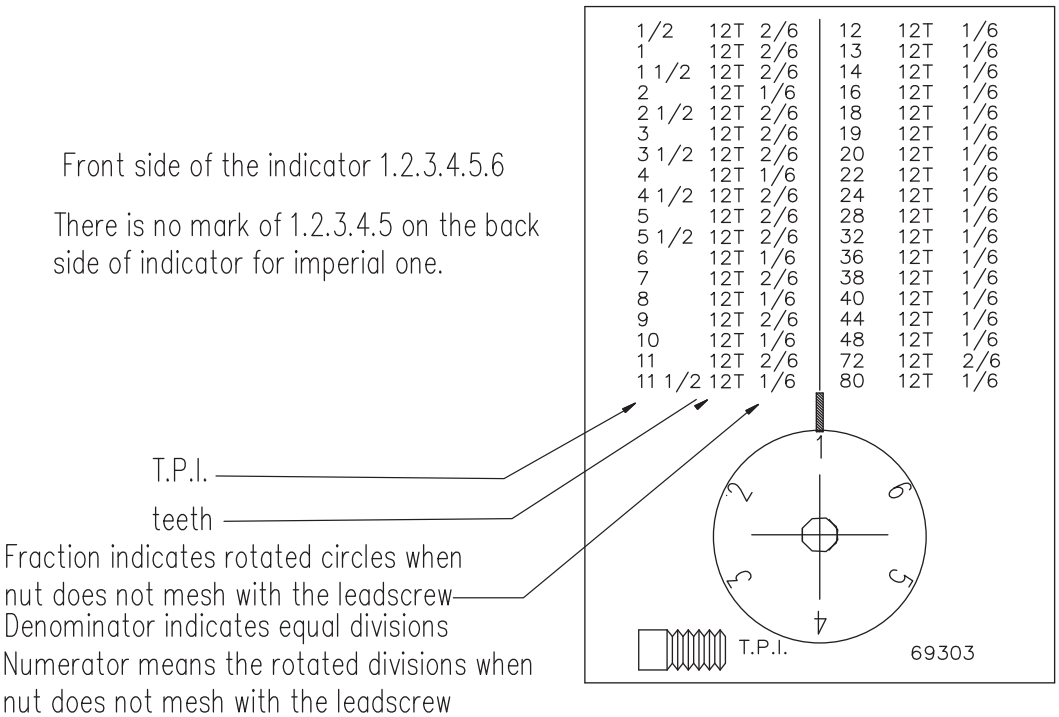

1/2	12T	2/6	12	12T	1/6
1	12T	2/6	13	12T	1/6
1 1/2	12T	2/6	14	12T	1/6
2	12T	1/6	16	12T	1/6
2 1/2	12T	2/6	18	12T	1/6
3	12T	2/6	19	12T	1/6
3 1/2	12T	2/6	20	12T	1/6
4	12T	1/6	22	12T	1/6
4 1/2	12T	2/6	24	12T	1/6
5	12T	2/6	28	12T	1/6
5 1/2	12T	2/6	32	12T	1/6
6	12T	1/6	36	12T	1/6
7	12T	2/6	38	12T	1/6
8	12T	1/6	40	12T	1/6
9	12T	2/6	44	12T	1/6
10	12T	1/6	48	12T	1/6
11	12T	2/6	72	12T	2/6
11 1/2	12T	1/6	80	12T	1/6

7 Maintenance and service

7.1 Accuracy check

7.1.1 Machine accuracies

The machine, after installation and before starting to operate, should check all the accuracies. During machine running, check the machine accuracies periodically, to guarantee the long effective accuracies of the machine.

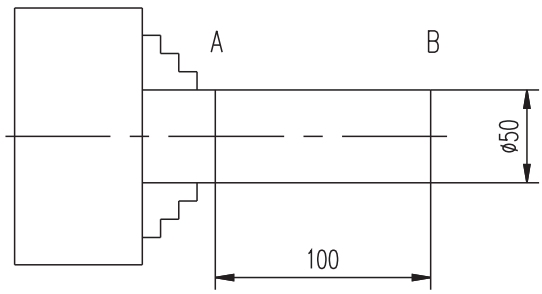

7.1.2 Inspection of headstock

After checking the machine's accuracies, it is suggested that the headstock accuracies should be checked. Inspection method: fit a piece of steel rod (dia. 50mm; length >150mm). Finish turn the cylinder without tailstock and the cylindricity should not be more than 0.015mm over 100mm.

7.1.3 Tailstock check

Fit one piece of ground steel shaft (300mm) between centers, then move the micrometer along the center line to check the accuracies of the tailstock. Align the tailstock according to the way adjusting the screw (C) at page 43.

7.2 Driving belt adjusting

Switch off the mains when checking the tension of V belt, then press point D in the belt by hand. The tension should be regulated as follows: uncrew the two lock nuts C in the bolt B, then tighten the upper and lower lock nuts in turn.

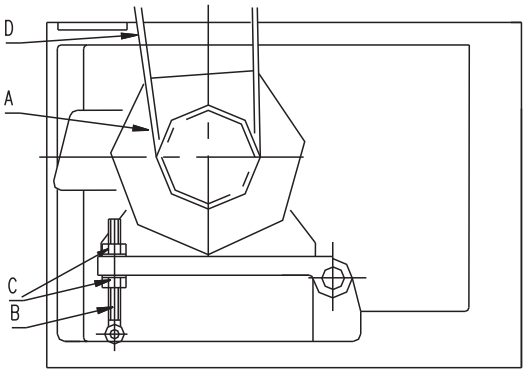

DANGER: Cut off the mains before adjusting and checking V belt, or accident may happen.

7.3 Clutch adjusting (for mechanical clutch lathe)

Two plate clutches are incorporated in the headstock, which respectively transmit the torques of spindle forward and reverse rotations. With the standard chuck fitted, if the time, from spindle stop to start at high speed, exceeds the range of 8 seconds, it is necessary to adjust the clutches. Adjusting procedure is as follows:

1. Cut off the machine power supply.
2. Set the spindle to the neutral position --- "O".
3. Open the headstock cover.
4. Press down the shear pin E to compress the spring F. Turn the two nuts G respectively to adjust the pressure of the friction disc H. Adjust one or two slots every time.
5. Reset the shear pin to the notch of the nut G and close the headstock cover.

DANGER: Cut off the mains before adjusting and checking the clutch, or accident may happen.

NOTICE: Do not over tighten the clutch, otherwise the clutch may be damaged due to overheating.

Never allow to adjust it at will, if the machine has solenoid clutch.

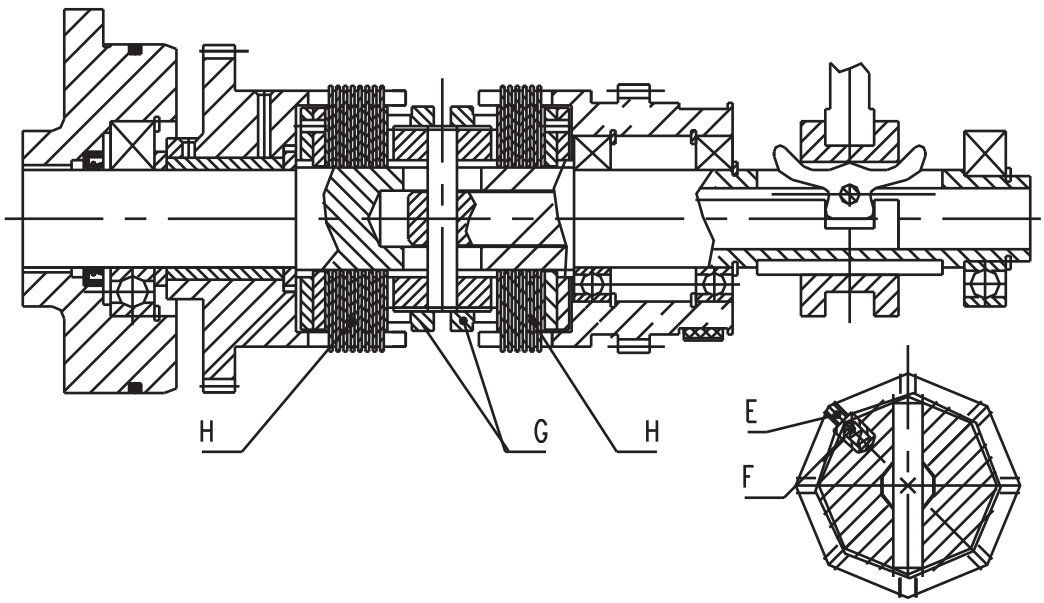

7.4 Headstock brake adjusting (mechanical clutch)

A friction brake is incorporated in the headstock, and it is in the position between forward and reverse rotations. The clutch is controlled by the 3rd shaft rod. With the machine running, if the braking time of spindle, from high speed running to stop, is over 8 seconds, the brake should be adjusted. The adjusting procedure is as follows:

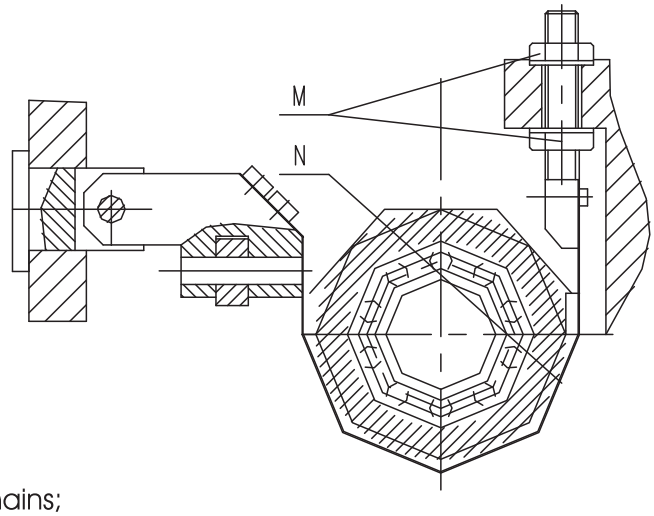

a. Switch off the mains;

b. Set the spindle low/high speed selector lever to neutral position and the third shaft rod to the neutral position;

c. Open the headstock cover.

d. Adjust the pressure of the braking belt N by adjusting the nut M to the extent that the other shafts will not rotate while turning the pulley shaft.

e. Reset the headstock cover.

DANGER Cut off the mains before adjusting and checking the clutch, or accident may happen.

NOTICE Never allow to adjust it at will, if the machine has solenoid clutch.

7.5 Adjustment of spindle bearing

7.5.1 Bore of 52mm and 82mm spindle

CDS6240A/B, CDS6250B, CDS6256B, CDS6266B , CDS6276B the front spindle bearing is a double row roller bearing and the rear bearing is paired radial thrust ball bearing with a damp bush as the middle bearing.

DANGER Cut off the mains before adjusting and checking the spindle, or accident may happen.

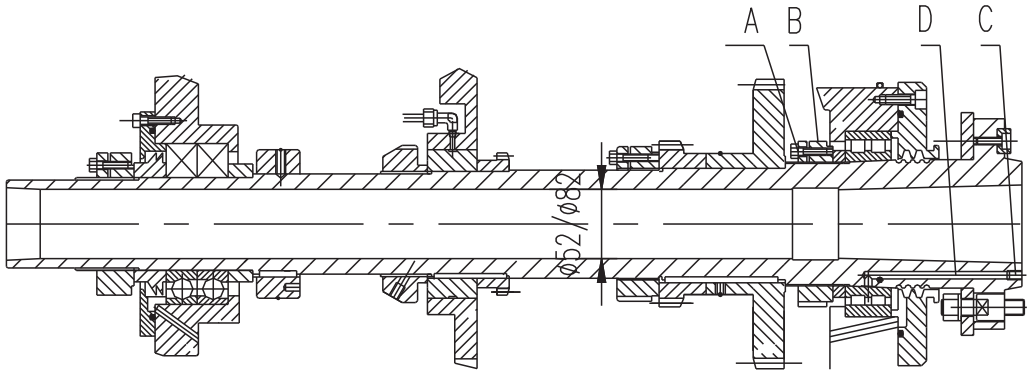

The clearance of front spindle bearing has direct influence on the accuracy of machined workpieces. The clearance has been adjusted before delivery. If it is necessary to alter it, for the machine with bore of 52mm and 82mm spindle,follow the following procedures:

For decrease the clearance, loosen the screw A and tighten the nut B.

For increasing the bearing clearance, take off the screw C, loosen the screw A and the nut B. Fill pressure oil into the oil hole D with a special hand pump (optional). Make the bearing inner ring move axially along 1:12 taper surface. After adjusting, tighten the screw A and the nut B.

7.5.2 spindle with 105mm bore

CDS6240C、CDS6250C、CDS6256C、CDS6266C、CDS6276C the front and rear spindle bearings are both taper roller bearings without middle bearing.

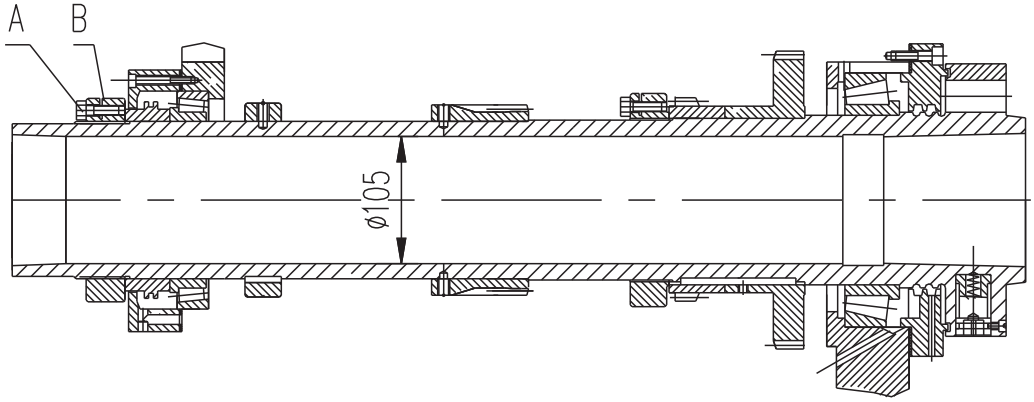

If it is necessary do the following alteration for 105mm bore of spindle lathe:

For decrease the clearance, loosen the screw A and tighten the nut B.

For increasing the clearance, loosen the screw A and loosen the nut B.

After adjusting, tighten the screw A.

Since the clearance adjustment has great effect on accuracy and cutting performance of spindle, only the experienced serviceman is authorized to do this.

7.6 Tool mount and adjustment

Loose the locking bolt of SC on the tool post, and mount the turning tool CT in the tool slot.

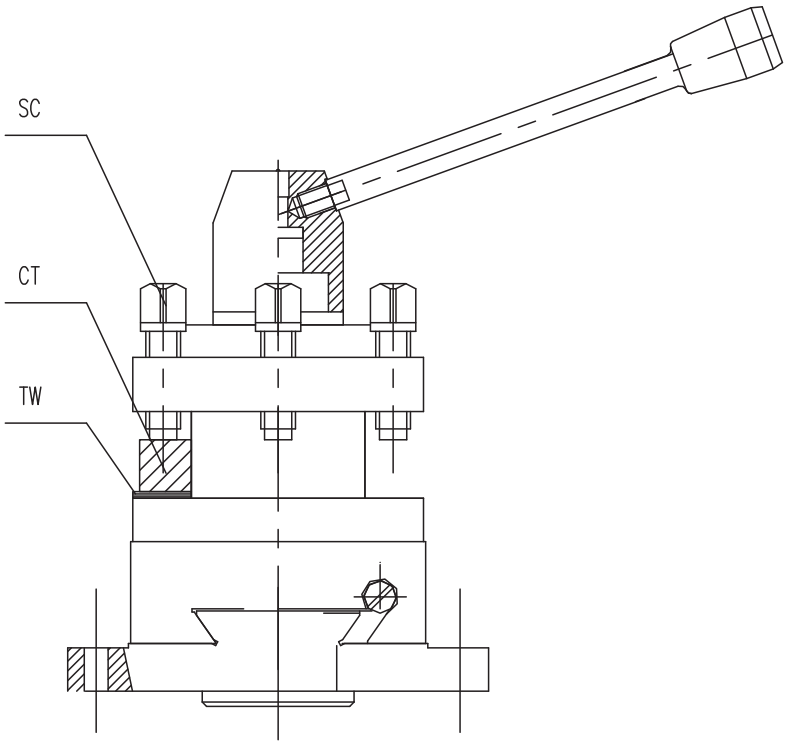

The extent byond the tool post should be less than 37mm. Keep the height of tool tip is the same with workpiece center (sindle center) by means of the washer TW (refer to tailstock center). After finishing ajusting, tighten the bolt SC.

Notice:

If the tool tip and workpiece center is not at the same level, the working angle may be changed, so the tool can not reach the center of the workpiece, or even damgae the tool.

The washer under the tool should be flat and align with tool post. And two washers or less is better.

The adopted tool height is 25mm. Never allow to use any tool, which cross section height is higher than 25mm.(e.g. 32mm).

7.7 Adjustment of cross ball nut

Friction between the leadscrew and the nut may cause wear of the nut, which may result in too large lost motion of the cross graduation ring. In this case the clearance between the cross leadscrew and the nut should be altered. To do this slacken the dog point screw 1 and properly tighten the screw 2 to make the clearance desirable. Then tighten the screw 1.

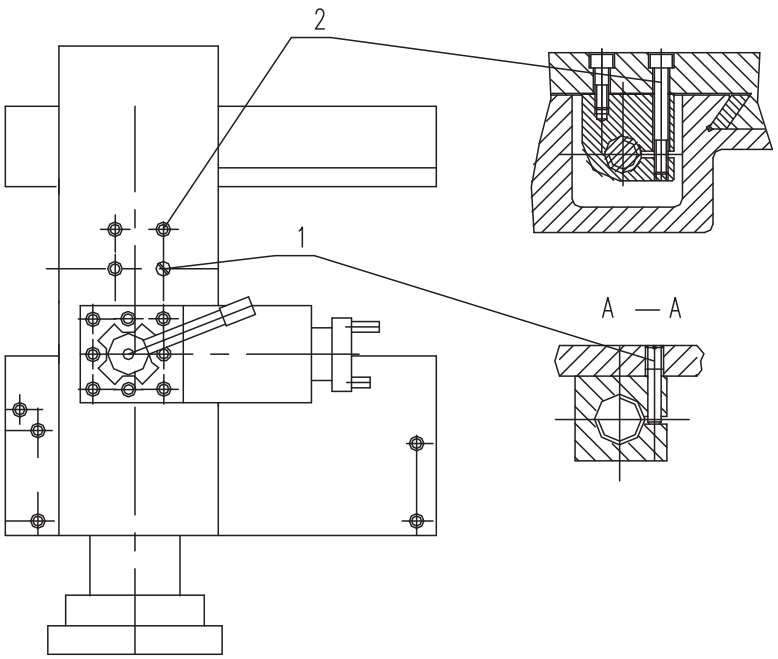

7.8 Guideway gib

Tapered gibs are fitted to the cross slide and top slide to eliminate the effects of wear. To adjust the gibs, slacken the rear screws D and then tighten the front screw, making only slight alteration at a time. Finally re-tighten the rear screws. Before adjusting, clean and lubricate the gibs to ensure a smooth action.

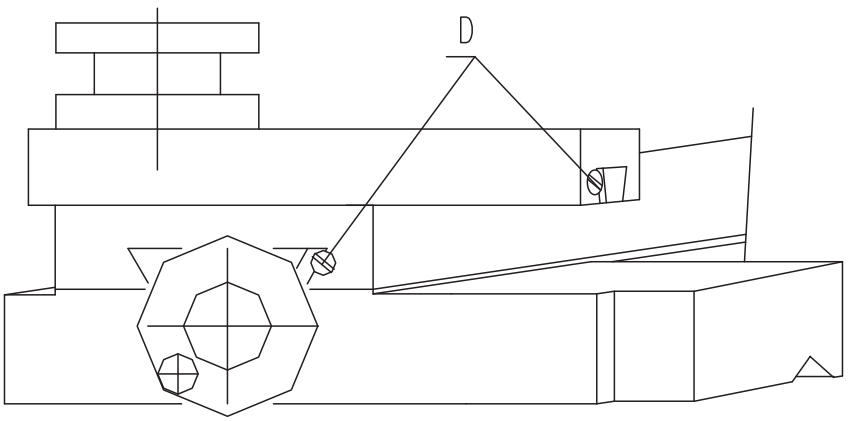

7.9 Supplement to chuck, fixture and spindle

According to EN1550:1997《Safety of Machinery -Safety requirements for the design and construction of work holding chuck》to operate 3-jaw chuck and 4-jaw chuck.

According to EN1550:1997,the user should prepare 3-jaw chuck and 4-jaw chuck by their own. Or the user can order them specially.

For the machine of max. spindle speed is of 2240r/min, the diameter of the chuck could not exceed 250mm; if the highest spindle speed is of 1700 r/min and 2000 r/min, the diameter of chuck should be less than 320mm.

The balance grade is G16, and for the clamping range, refer to Chuck Operating Manual.

The required accuracy is on the Chuck Check Sheet.

Among them, radial run out of test bar for 3-jaw self-aligning chuck is as follows:

250mm chuck is of 0.100mm;315mm chuck is of 0.125mm;

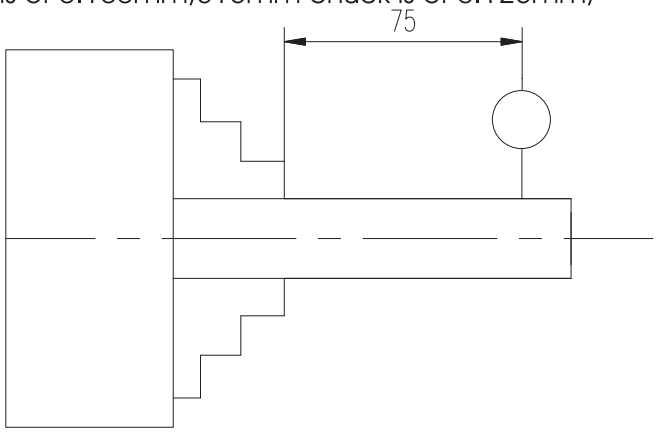

Notice:

Never allow the chuck to clamp the workpiece exceeding the clamping range in Chuck Operating Manual supplied by the manufacture.

Do not run the spindle in a speed that higher than the limit speed stated in the Chuck Operating Manual supplied by the manufacture.

Danger:

Do remember to remove the chuck spanner after clamping the workpiece, otherwise serious injury is the likely result.

CDS series spindle nose:

52mm bore is of C-6 type spindle nose. A2-6 and D6 type can also be provided;

82mm and 105mm bore is of D8 type; also A2-8 and C-8 type spindle nose can be proided.

C-6 and C-8 type spindle nose are according to ISO 702/ II;A2-6 and A2-8 type are according to ISO 702/ I);D6 and D8 type are up ISO 702/III)

The following sketchs are for the standard configurations. For other types of spindle nose, the user can order additionally, if the sketch is needed, please contact technology department DMTG

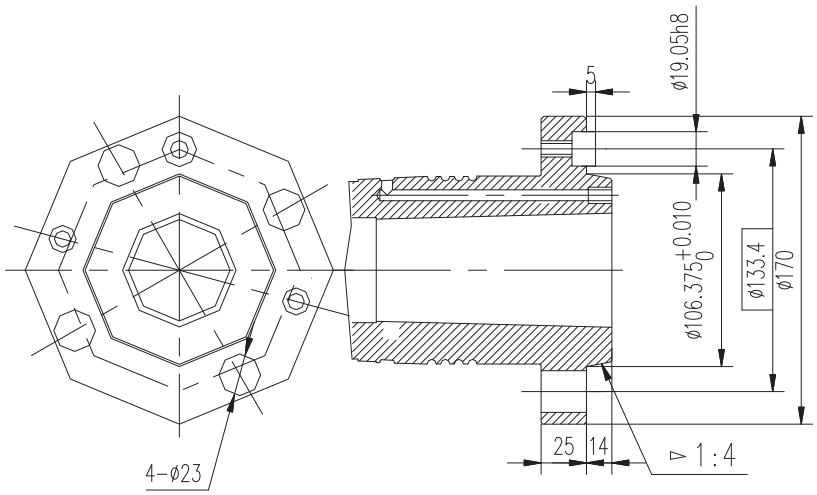

C-6 type spindle nose

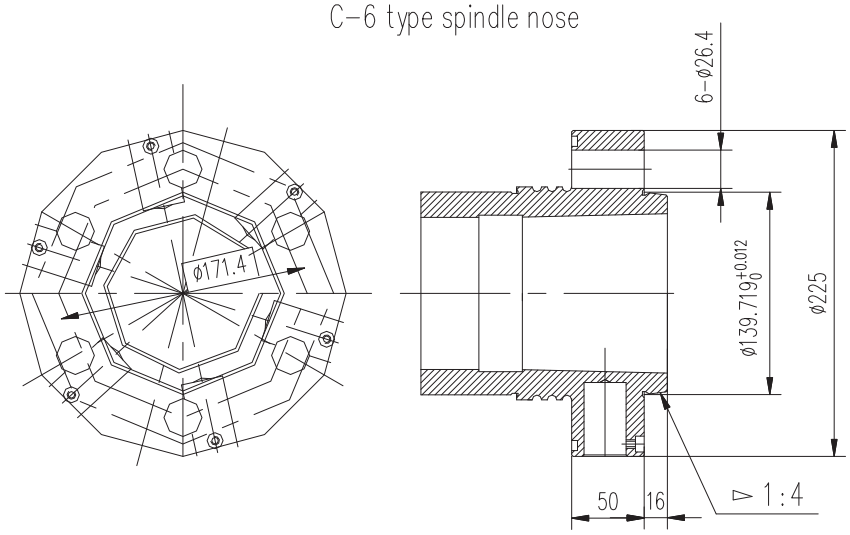

D-8 type spindle nose

8 Machine protective measures

8.1 Emergency-stop button

For two of ESB on the front of the machine, see section 5 (machine control system).

8.2 Necessary safety caution labels

Although some safety equipments have been used by this machine, some latent hazards may occur. So some necessary safety caution labels are set to remind operators. Safety caution label see 1.12 .

8.3 Apron overload safety clutch

This machine is mounted overload safety clutch(refer to 5.5.9). When automatic feed cutting works, or the apron comes across the backing pin 10 installing in the machin body, the load suddenly change or has the obstacles, the cone TC (see the following list) installs in the overload safety clutch of slide carriage box, which will relieve to ensure the working safety. The method of modulate the overload safety clutch is: take down the bolt 1 and cover 2,loosen the nut 3, when fasten the bolt 4 that increase the overload power of safety cluth, loosen nut 4 that reduce the overload power.

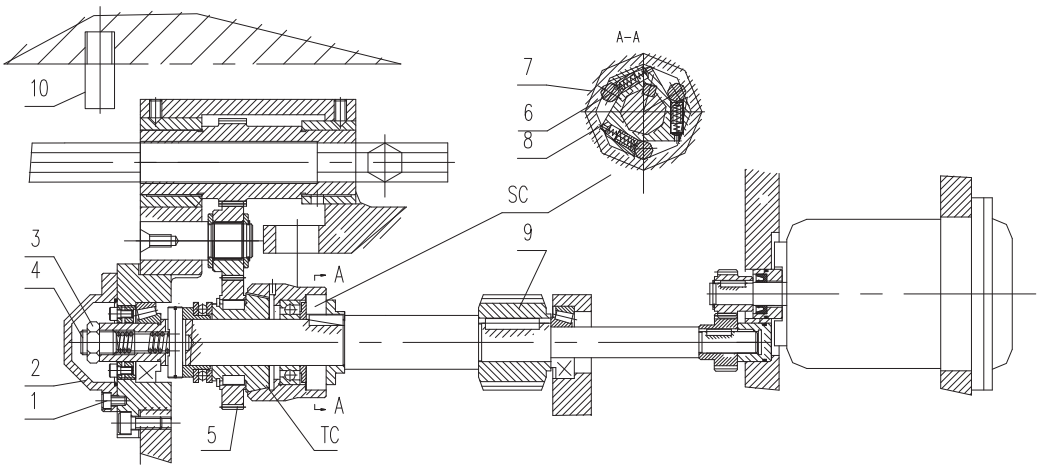

8.4 Overtravel clutch

To ensure the machine will cut off the normal feed movement when starting the rapid motor, and ensure the machine's safety running. There mounts the single transcend clutch(refer to the SC of previous diagram) in apron. Under normal feed condition, the feed shaft brings the power source through the gear5, and through safety clutch TC's outer ring7 anticlockwise rotary, the roller 6 brings the inside track8 rotates, and make the worm9 drive wormwheel rotates. After starts the rapid motor, driving the worm anticlockwise rotary. Due to single transcend clutch's inside track8 rotates faster than outer ring7, the roller6 is loosen, and make the outer ring7 lose the contact with inside track8 and rotate independently. Make the power don't bring by feed shaft and realize the safety for rapid. After the rapid motor stops, the outer ring7 rotates faster than inside track8, the roller6 tighten again, and resume the normal feed movement.

Due to use the single transcend clutch, when feed shaft clockwise rotary(this time the

outer ring7 of single transcend clutch also clockwise rotary), the roller6 don't tighten, don't drive worm9 and wormwheel to rotate. So the left and right handle of headstock place the reverse position of feed movement, that don't drive the worm9 and wormwheel to rotate.

Notice! **The rapid motor couldn't countermover, the single transcend clutch will lose protection, and damage the rapid motor.**

8.5 Apron handwheel safety disengaged device

To ensure the safety for apron longitudinal feed handwheel, this machine has mounted the apron handwheel safety disengaged device (see the following diagram).

When the apron longiudinal feed, through apron longitudinal and cross four arm cross handle's operating, make the cam 1 rotate, cam1's terminal face make the lever 2 swing clockwise, pull the push rod 3 and 4 move to outer shaft, the push rod4's terminal face clutch and gear 6 terminal face clutch disengaged, to cut off the rotary of gear 7 and handwheel 8.

After the longitudinal and cross four arm cross handle of apron returns to the middle position, under the function of the spring 5, the former actions return to the original state. When the handwheel 8 rotates the apron longitudinal move.

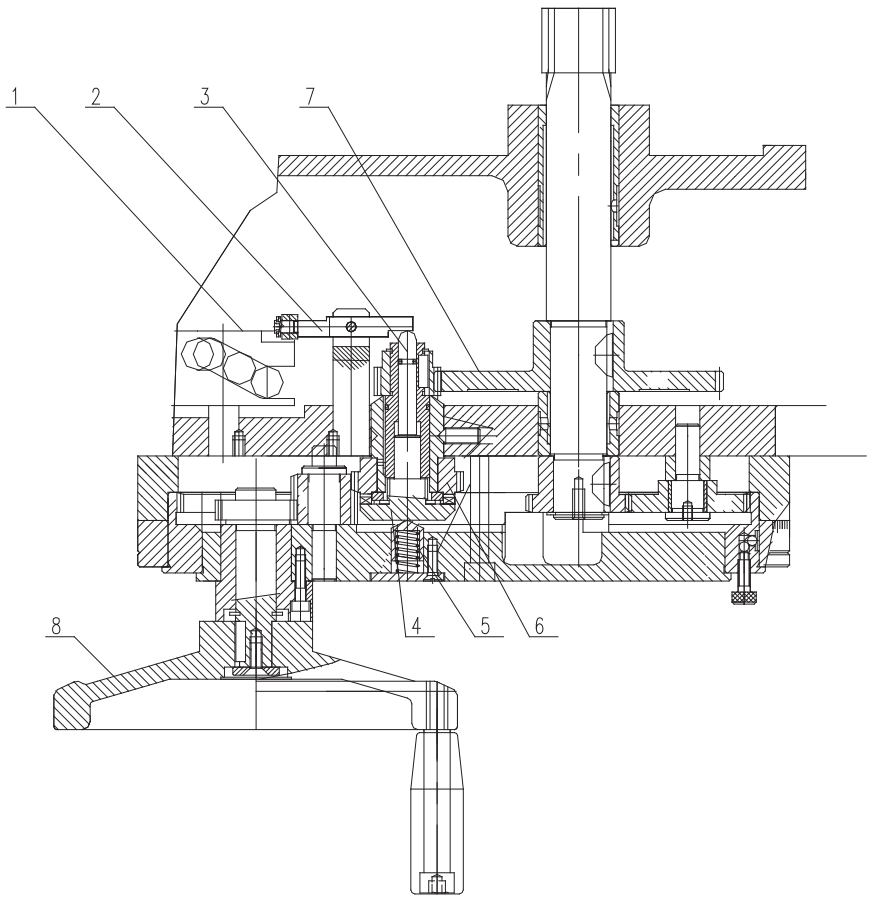

3.4.3 Permitting cutting parameter

Spindle speed r/min	Max. turning dia. of workpiece (medium carbon steel, normalize tempering)					
	ø100	ø160	ø200	ø250	ø300	ø400
26 36 50	1.7	1.7	1.7	1.36	1.1	0.85
72	1.7	1.7	1.7	1.36	1.1	0.85
100	0.85	0.85	0.85	0.7	0.55	0.42
125	0.7	0.7	0.7	0.54	0.44	0.34
150	0.56	0.56	0.56	0.35	0.31	0.28
180	0.47	0.47	0.47	0.37	0.29	0.24
210	0.42	0.42	0.42	0.34	0.27	0.21
250	0.36	0.36	0.36	0.27	0.22	0.17
300	0.28	0.28	0.28	0.18	0.15	0.14
360	0.24	0.24	0.24	0.19	0.14	0.12
1000	0.09	0.09	0.09	0.07	0.06	0.05
1220	0.08	0.08	0.08	0.06	0.05	0.04
1440	0.06	0.06	0.06	0.05	0.04	0.03
1700 2000 2240	0.05	0.05	0.05	0.04	0.03	0.02
	Single side cutting depth (mm) X feedrate (mm/r)					

The selected data should be less than the permitting value.

E.g.:turning dia. of workpiece is 200 mm;spindle speed 100 r/min, workpiece is medium carbon steel:

Single side cutting depth(mm)X feedrate(mm/r) ≥0.85

turning dia. of workpiece is 200 mm;spindle speed 1000 r/min, workpiece is medium carbon steel:

Single side cutting depth(mm)X feedrate(mm/r) ≥0.09

turning dia. of workpiece is 200 mm;spindle speed 1000 r/min, workpiece is copper, and material coefficient K=10;

Single side cutting depth(mm)X feedrate(mm/r)≥0.09XK=0.09X10=0.9

4 Handing and installation

4.1 Handling and store

The measures of anti-rust and shockproof should be taken during packing. It endures transportation and store in -25℃～55℃, and can bear transfer and store in 70℃,no more than 24 h.

Be care of not making machine exposed to rain or damaging the packing during transfer and store.

The packing material does not pollute the environment.

4.2 Machine lift

Steel rope should be used during lifting as showed on the packing. Do not let the machine being impacted and vibrated during lifting and unburdening. And at any circumstance, do not let the machine over slant.

While unpacking, check the outside appearance first, then count the accessaries, tools and technical documents according to "packing List".

For machines with 750mm or 1000mm of distance between centers, position sling at the first angled web nearest to the headstock. For machines with 1500mm, 2000mm or 3000mm of distance between centers, position slings at the first angled web nearest to the headstock and the web furthest or further to the headstock. When lifting, place wood blocks between the sling and the guideways to protect the guideways from damage,And at any circumstance, do not let the machine over slant. (see Fig. 1)

The diameter of steel rope should not less than 22mm, and firm enough to lift. The lifting capacity is more than 4T (For machine weight, refer to Fig.3.3---machine overall dimension and net weight)

Carefully lift the machine clear of ground and if necessary readjust and reposition the saddle to achieve better balance before lifting further.

Warning:

The lifting capacity should be more than 4T; diameter of rope should be more than 22mm.

Notice:

- Keep the machine balance during lifting, especially when the machine just be lifted clear of ground.
- The angle of lift rope is less than 60 .
- When machine lift is carried out by two persons or more, signal should be used between workers for cooperation.
- Check the tightness of the rope before lifting.
- Safety load of the sling equipments should be known clearly; the safety coefficient is of 6:1.

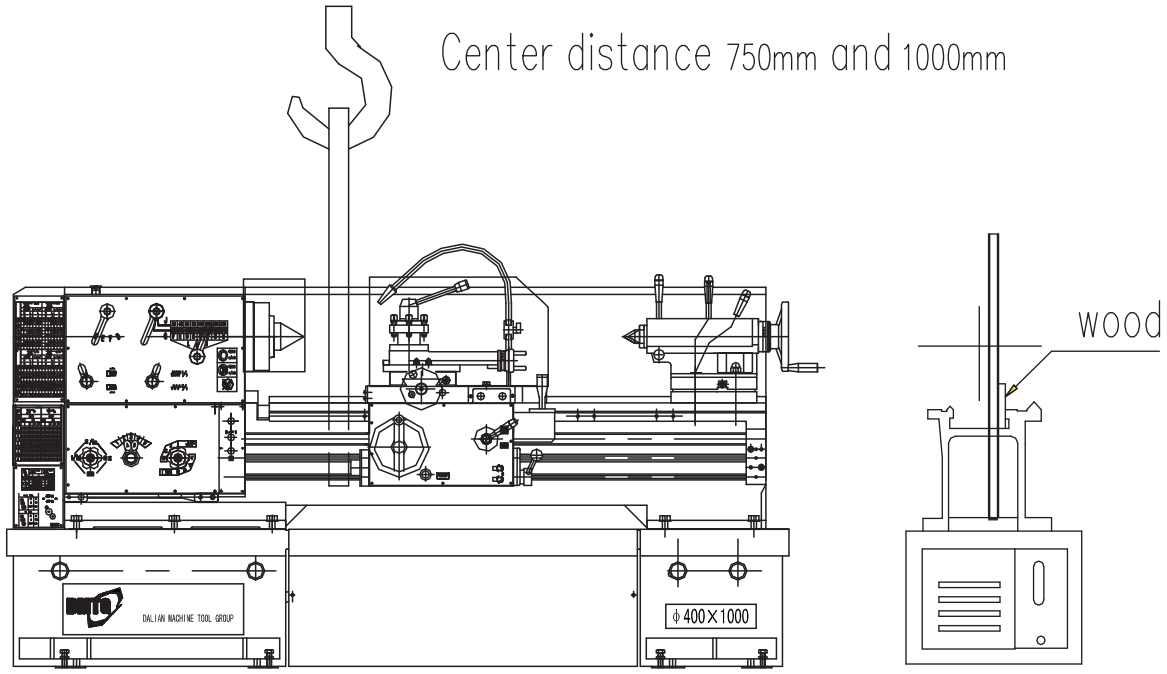

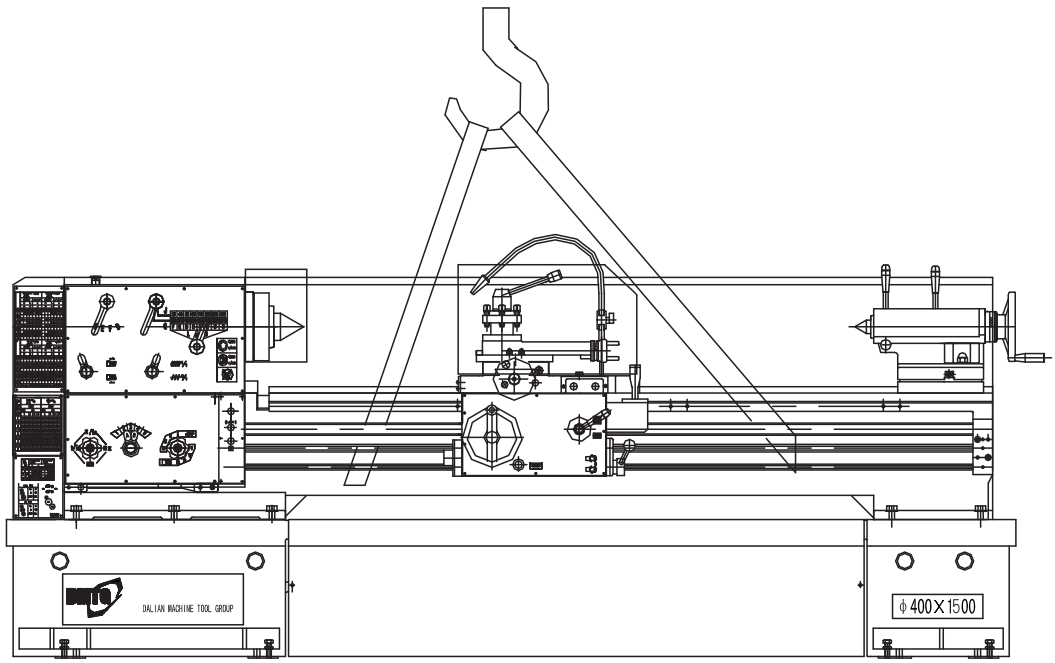

Fig. 1 Machine lift

4.3 Installation

4.3.1 Preparation

Pay attention to the following items besides of installation surroundings should being as shown in Operating Manual:

- Locate the machine on a flat, level and solid foundation, leaving sufficient area easy for operating and servicing. The lathe may be used when free standing but for maximum performance it should be bolted to the foundation.
- The machine shoule be installed in a workshop,which has sufficient lighting, no contamination, no sundries and good ventilation condition.
- Locate the mahcine in the workshop with lightning-avoid device.
- If the machine only can be installed on a unsolidified foundation, piling or similar measure should be taken to enhance the supporting force of soil to avoid machine sinking and leaning.
- If the machine is located in the place where near to vibration source, ditch around the machine or some other anti-vibration device should be bulit.
- The machine could not mount in the potential of danger explosion environment.

4.3.2 Power connector

Lathe without electric cabinet:The wiring terminal is in the plinth.

Lahte with electric cabinet:The wiring terminal is in electric cabinet.

4.3.3 Main power

According to the contract to decide the machine voltage and frequency.

Voltage and frequency:

Rated frequency	Rated voltage					
50Hz	220V	380V	400V	420V	440V	600V
60Hz						

Range:

within the range of rated voltage ±10%

For details to electric part refer to section 13 Electric System of the Manaul of this Operating Manual.

4.3.4 Installation

The method of installation will affect the machine performance a lot. For a precision machining guideway lathe, if the installation is not right, the working precision will changed.

Most of malfunctions are caused by incorrect installation.

Read the installation steps carefully, and install the lathe as shown otherwise it will affect machine accuracy and working life.

4.3.4.1 Foundation

Prepare foundation according to its surroundings and Foundation Plan (Fig. 2) and place the lathe on a flat foundation. And the maintenance space should be considered in floor space.

Foundation plan Unit : mm

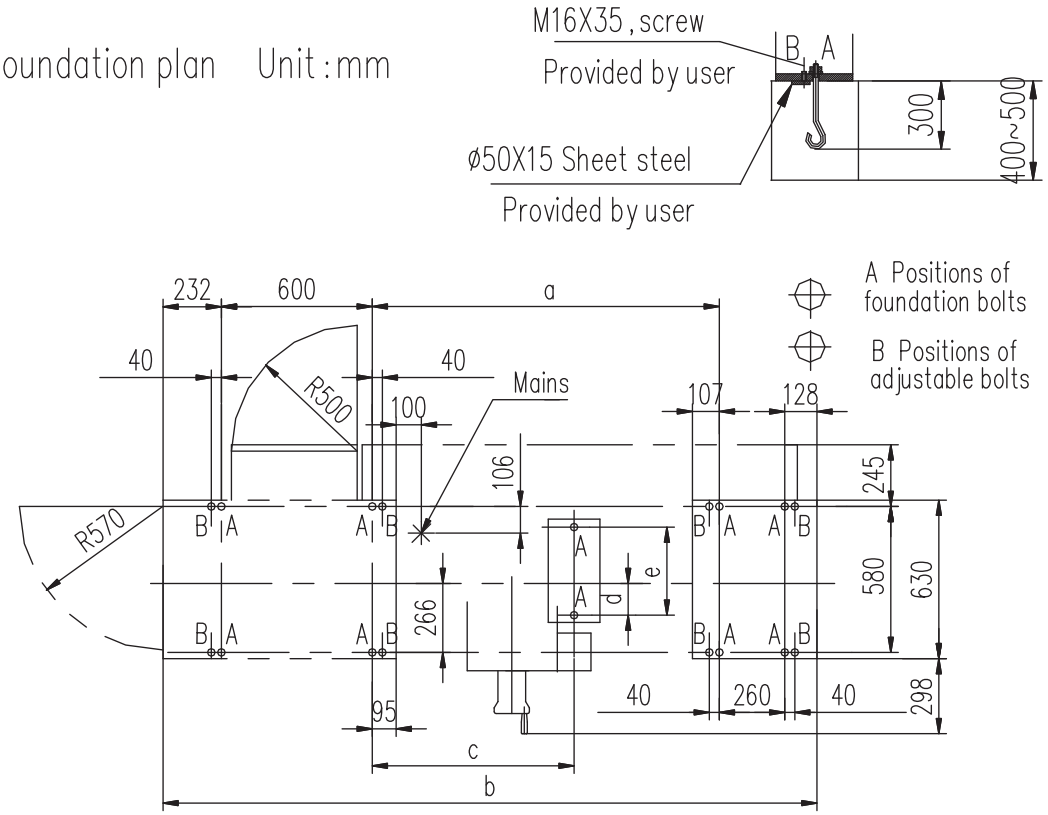

Dim / BC	a	b	c	d	e
750	1130	2350	——	——	——
1000	1380	2600	——	——	——
1500	1880	3100	——	——	——
2000 2200	2380	3600	1070	126	350
3000	3380	4600	1600	266	580

4.3.4.2 Procedure

- Place steel wedges near the foundation bolts respectively. The thickness of the wedge is of 10 mm, and diameter is of 60~80mm.
- The level of the machine should be adjusted to such degree that the readings of the level gauge in longitudinal and cross directions do not exceed 0.02/1000. If not, adjust the adjustable bolts.

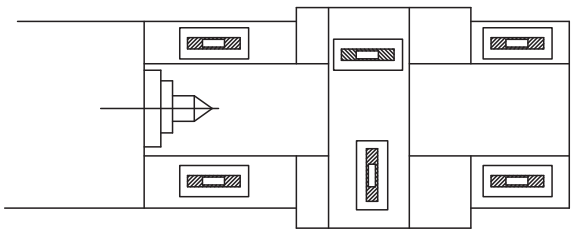

- Then fix the foundation bolts by concreting into their holes. After it is dry, level the machine againe.
- Adjust both the wedges and the foundation bolts to level the machine.
- Tighten all the foundation bolts, but can not affect the installation precision.
- After leveling the machine, fix the wedges with concrete mortar. Fill and level up the foundation area to avoid lubricant flows in.
- After one week relevel the machine with level gauge, then the machine is ready for producing.

4.3.4.3 Inside equipment connecting

The power for every lathe should be supplied by a outside distribution box with separate fuse. The lead-in should be connected with wiring terminal in the electric cabinet, and the wire is of earthing wire. The earthing is firm and reliable. For details to electric part refer to section 13 Electric System of the Manaul of this Operating Manual.

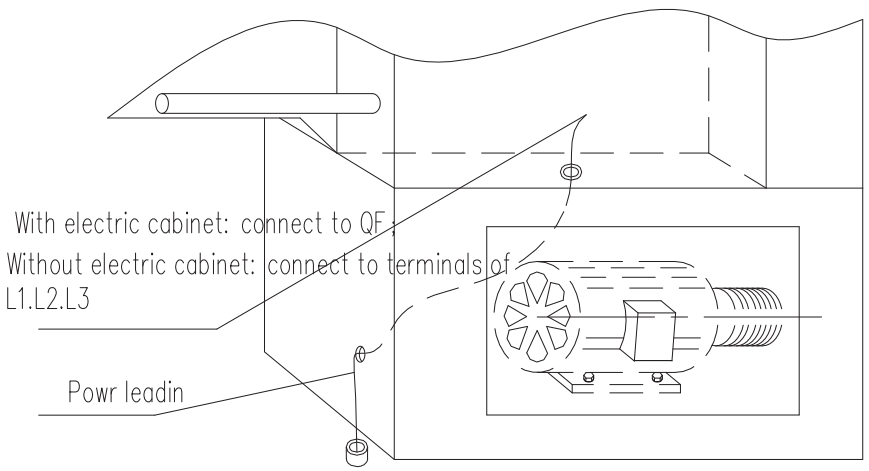

The fuse is of 30A(220-600V). The power is recommended with over voltage protection device. The powr leadin is of 5-core X 6mm^2.

Before energizing the machine, the following work should be done:

- Recheck every connector for tightness.
- Check and ensure the powr phase is right. If the phase is wrong, the rotating direction of the motor is different with the required direction.

Checking method:put the thread lever to the right thread position, then put up the start lever to run the spindle. The spindle should rotate forwardly. If not, cut off the powr, then exchange two phases between 3-phase terminal in electric cabinet.

4.3.4.4 Cleaning

During installation, remove the anti-corrosion coating with kerosene from all the machine parts. Then coat with machine oil on the guideways, leadscrew, feed shaft and other machined exposed furface to avoid rust. After cleaning all parts of the machine, fill enough lubricant to the machine as requied of machine lubrication system.

4.3.4.5 Lubrication check

Be sure that the headstock and feed box are lubricated well. The oil tank mounted in the left leg is filled with 12 liters of bearing oil MOBIL Velocite 10 and regulate the oil level. The apron reservoir is filled with MOBIL D.T.E.26 antiwearing hydraulic oil to the level of the oil sight glass.

Before each shift, fill oil to the saddle, cross slide and tailstock with the supplied oil gun.

For details see the lubrication part of maintenance section in the Operating Manual.

4.3.4.6 The first use of the machine

Before run in, it is necessary to read the Operating Manual so as to kown well the structure and to familiarize yourselves with the function of its control mechanisms and their operation ways. Check the working conditions of every parts manually. And inspect whether electric system is in good condition and motors are in dry state before the macxhine is conencted to the mains; and check if the rotating direction of the motors is correct after connecting to the mains.

After whole machine being checked up, idle run test may be carried out. At the begining, put the lever of operating spindle in the stop position and then start the main motor. After oil coming into the oil sight glass in the fornt of the headstock, let the spindle run at the lowest speed for a certain space of time, and then speed up gradually. A new machine can be put into operation only after the idle run test has been done.

Recommended run in time and speed:15% of the max. of speed run 1 h;
50% of the max. of speed run 30 min;
80% of the max. of speed run 30 min.

4.3.4.7 Mount of chuck, faceplate

According to different workpiece, the machine can use 3-jaw chuck, 4-jaw chuck and faceplate . So the operator should known the knowledge of mount and dismount ways.

When fitting chuck or faceplate, first ensure that the spindle nose and chuck taper are clean.

For a C-type spindle nose, check whether the pin bolt of the chuck is mounted reliably. While mounting chuck, ensure that the lock nut is locked firmly.

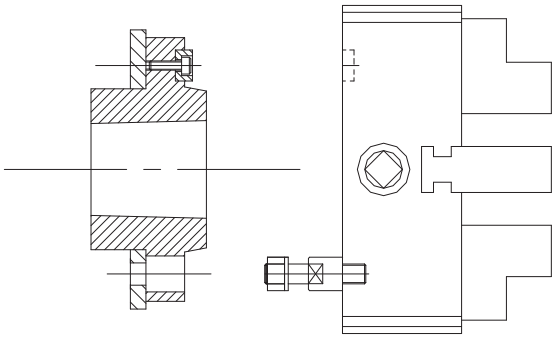

For a D-type cam-lock spindle nose, ascertain that the cams lock in the correct position.

When mounting a new chuck it may be necessary to reset the cam-lock studs (A). To do this, remove the locking screws (B) and set each stud so that the scribed line on it is flush with the rear face of the chuck and with the circular scallop in line with the locking screw hole. Then retighten the locking screws (B) to mount the chuck on the spindle nose and tighten the six cams on the spindle nose in turn. The cam should be locked correctly. And the proper locking position is that the lock mark in the cam should be between every two "V"s. Provided the cam is not locked in this position, the chuck or face plate should be dismounted and readjust it as the above-mentioned procedure.

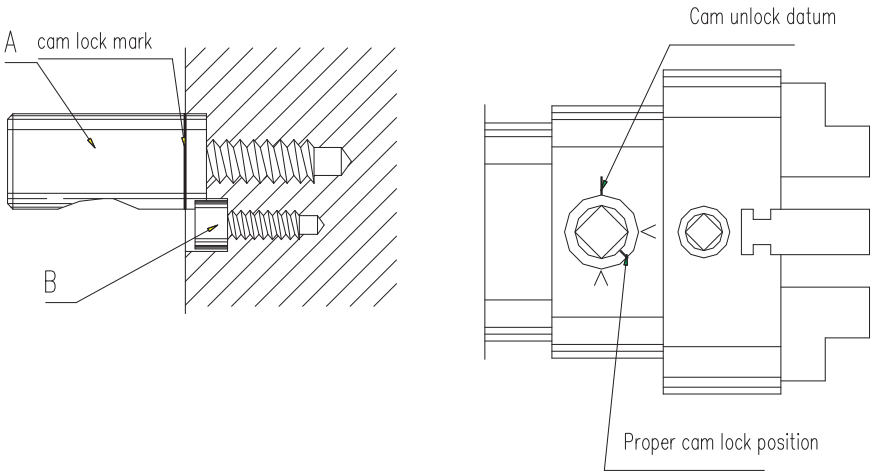

Level, lubricate and mount the chuck as required in Chuck Manual supplied by the manufacturer while replacing and mounting the chuck.

Adjust the chuck as recommended method in Chuck Manual.

The chuck and chuck wrench that measure up to CE should purchase by customer.

Notice:

3-jaw chuck, 4-jaw chuck which the operater use should be complity with EN1550:1997 《Safety of Machinery-Safety requirements for the design and construction of work holding chucks》 .

Never allow to exceed the spindle speed limit when using 3-jaw chuck, 4-jaw chuck or faceplate.

Danger:

- Any chuck with defect e.g. crack must not be used for the machine.
- For D-6 or D-8 spindle, mount the chuck by turning the 6 of cams in spindle radial hole clockwise with spanner; while dismount, turn them counterclockwise. Or machine damage and person casualty may occur.

4.4 When machining the imbalance workpiece, a balance block should be added to the fixture.

Before operating the machine,fixture, chuck and balance block should be checked for their security.

Before operating the machine, choose proper cutting parameters, and reduce the spindle speed, at the same time select the right cutting tools.

4.5 Besides the manufacture factors, machine noise is related to the operating method.

Main factors for lowering the noise:change selection of tools,chane cutting parameters,check and improve workpiece, tools and tool post clamping method.

For 3-jaw chuck and 4-jaw chuck, the max. speed should be indicated. The mark on the chuck or supplied Chuck Manual will prevail.

5 Control system

Understand each control lever's function to avoid damgaing the lathe before operating.

Key points:

1.Know how to stop it before starting the lathe.
2.If anything emergency occurs, do stop running the lathe.
3.Keep cutting speed, feedrate and cutting depth adapt to the workpiece and fixtures.
4.Never touch the tools, chuck and workpiece while the spindle is running.
5.Always wear and use correct protecting appliance and equipments.

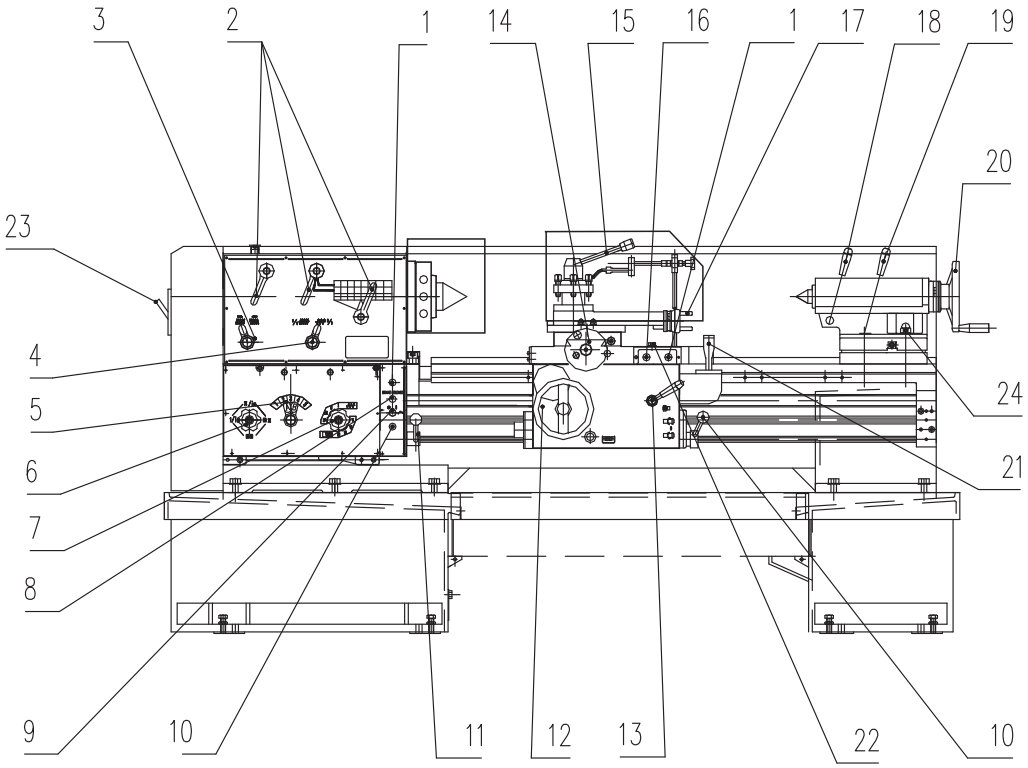

Control layout of machine

5.1 Talbe of control levers

For the machine with mechanical clutch

Ser.no.	Name and function	Ser. no.	Name and function
1	ESB	14	Transverse handwheel
2	Spindle speed selecting lever	15	Top slide locking lever
3	Left/right thread lever	16	Main motor start button
4	Pithc multiplying lever	17	Top slide lever
5	Feed basic lever	18	Tailstock quill lock lever
6	Thread selecting lever	19	Tailstock quick-lock lever
		20	Tailstock handwheel
8	Feed multiplying lever	21	Carriage long./trans. cross lever and rapid travel button
9	Coolant pump switch	22	Saddle lock screw
10	Power pilot lamp	23	Machine power switch (in the E/cabinet if has E/cabinet)
11	Spindle clutch lever	24	Tailstock additional lock nut
12	Apron longitudinal handwheel		
13	Half nut lever		

For the machine with solenoid clutch

Ser.no.	Name and function	Ser. no.	Name and function
1	ESP butten	14	Transverse handwheel
2	Spindle speed selecting lever	15	Top slide locking lever
3	Left/right thread lever	16	Main motor start button
4	Pithc multiplying lever	17	Top slide lever
5	Feed basic lever	18	Tailstock quill lock lever
6	Thread selecting lever	19	Tailstock quick-lock lever
7	Brake release button	20	Tailstock handwheel
8	Feed multiplying lever	21	Carriage long./trans. cross lever and rapid travel button
9	Coolant pump switch	22	Saddle lock screw
10	Power pilot lamp	23	Machine power switch (in the E/cabinet)
11	Spindle clutch lever	24	Tailstock additional lock nut
12	Apron longitudinal handwheel		
13	Half nut lever		

Note: The brake relase buttong is used for releasing the spindle brake while spindle is changing its speed.

5.2 Meaning of control symbols

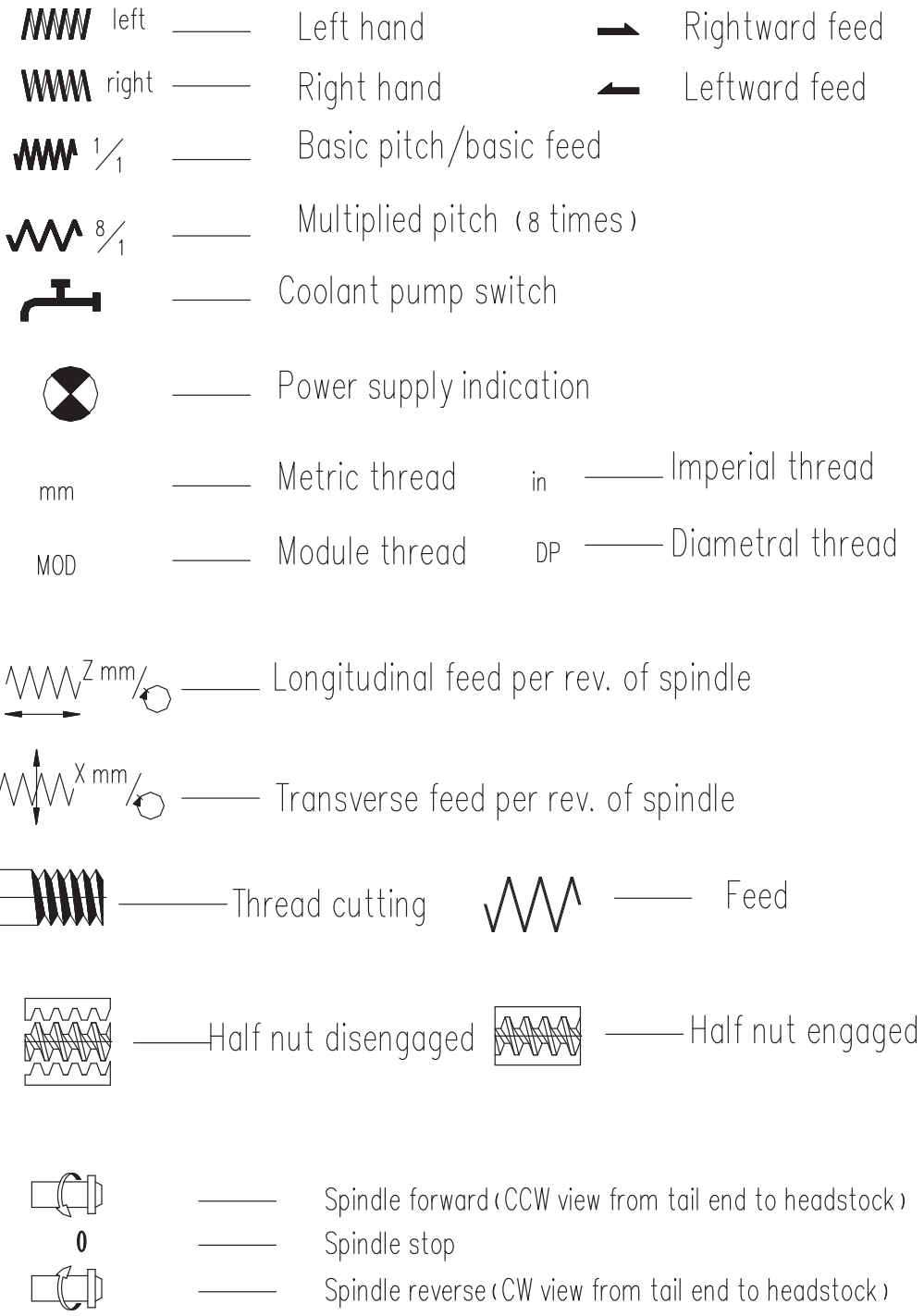

5.3 Meaning for direction of handwheel and lever

The relation between operation directions of saddle longitudinal travel handwheel(12), carriage cross moving handwheel(13) and top slide travel lever(22) and related travel directions of saddle, carriage and top slide is comply with the standard of GB/T17161-1997(eqv ISO447:1984)《Machine tool control devices operation direction》. While handwheel is rotating clockwise(From the view of operator face to axial end mounting the handwheel), the saddle will move to the right; and for carriage and top slide, they move to the farend.

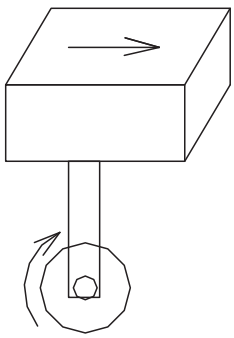

Travel directions of saddle and its handwheel

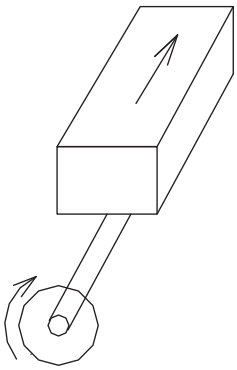

Travel directions of carriage, top slide and the handwheel

The relation: put up the lever, the spindle run forward; put down the lever, then the spindle run reverse.

According to "CE standard", the relation of spindle rotating direction and control lever:

Pull out the lever and put it up, spidnle run forward; when pull the lever out and put it down, spindle reverse. After stopping the machine with ESB, only when the control lever is in the neutral position, the main motor can be started.

Also the following machine can be made with special order:put up the lever, then spindle run reverse; while put down the lever, spindle run forward.

5.4 Steps

5.4.1 Preparation

- When power switch is in ON position, switch on the work lamp.
- Open the chuck guard before fixing the workpiece.
- Adopt relevant clamp ways to clamp the workpiece.
- Choose proper tools with different material and parameter.
- Before operating, close chuck guard and chip guard.
- Select the correct spindle speed by means of lever(1、4)on headstock and speed changing

plate. While changing the speed, if gears get stuck, changing the speed by turn the spindle manually.

- Choose the proper feed according to feed list on the position of lever.
- Rapid move the tool post towards to workpiece by tool post long./cross automatic feed lever and rapid moving button.

Notice: Considering the height of the operator, footplate can be used for easy operation. Watch out oil and water on the ground. The suitable height of footplate is 100~150mm.

5.4.1.1 Possible working location of operator

The possible working locations for operator operating machine, mounting/dismounting workpiece, machining workpiece, clamping/unclamping fixture and cleaning the chips are as follows:

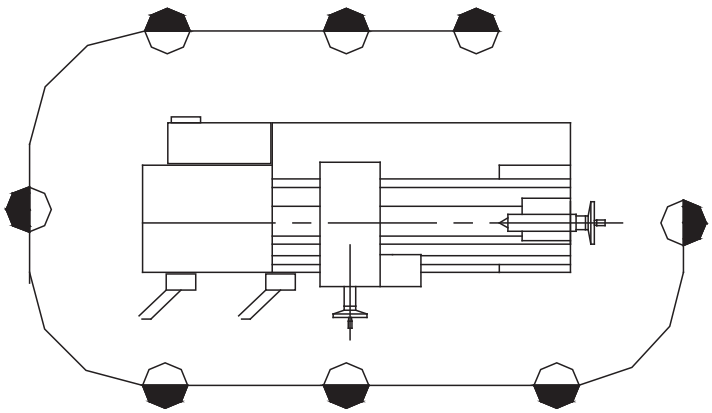

5.4.1.2 Requirements to workpiece clamp

- Different clamping ways are adopted due to different shape and produing quantity.
- Clamp workpiece on 3-jaw chuck: suitable for large batch of prodution of small parts, e.g. shaft. When machining heavy shaft part, the way of one end for clamp and the other end for fixing.
- While for large parts or even parts, like eccentric bush and crankshaft, clamp by 4-jaw clutch or mount in a faceplate, and dynamic balancing needs be made.
- For some long parts or workpiece clamping needs several steps, such as long shaft, long leadscrew, clamp the workpiece between two centers.
- For machining thin and long shaft($L/d \geqslant 25$), follower rest or center rest should be used to enhance the rigidity.
- Before clamping, depress the emergency button and cut off the mains.

Danger:

- Clamp the workpiece and tools firmly to avoid them hurn person by flying away.
- Never remove the chuck guard, while workpiece is being machined at high speed clamped by 3-jaw chuck.

To prevent hurting people, so do not clamp workpieces, chuck or any fixtures while motor is running.

Warning:

- For normal clamping, the workpiece can not be large. And the jaw extending beyond the chuck can not over 1/3 of jaw length, otherwise the jaw may be cracked. Reverse top jaws is aopted for large diameter workpiece.
- If the weight of workpiece is heavier than 10 kg, crane is recommended to be used.
- Never let long rod material extend beyond spindle back end.
- Machining even parts, the rotating of the workpiece may not balance, so the counter weight is needed. If the additive counter weight can not be used, spindle should run in a low speed to ensure security.

5.4.1.3 Requirements to tools

Dimension: The distance between spindle center line and tool supporting face is of 27mm. And the tool shank section is of 25mm × 25mm.The turning tool tip and spindle center line should be at the same level.

Tool material: Under normal condition, 3015 SANDVIK is used to produce brittleness material(cast iron, etc) and nonferrous metal. 4015 SANDVIK is used for producing plasticity material(steel parts). High-speed steel tools are usually used for parts with high impact and even shape. it is also can be used for finish turning tools and shaping tool(e.g. wide shade and deep feed turnning tool, thread finish turnning tool, etc).

Geometry parameters of the tools could be fitted to the requirements of cutting.

5.4.2 Machine normal start

- Turn on the main motor switch(23), then put the control lever(10) of spindle forward/reverse to the forward position, and start the spindle.
- Turn long./cross lever of tool post(21)to the neutral position, control the handwheel(12)and lever(14)on apron to realize forward and backward feed manually.
- Control top slide lever(17)by hand. Turn lever(17)to realize longitudinal and cross feed.
- After tailstock travelling to the workpiece, tight it by quick-lock lever(19). And drilling, reaming, and tapping can be realized through manual feed controlled by handwheel(20).

5.4.3 Power feed

- Turn on the main motor switch(23), then put the control lever(10) of spindle forward/reverse to the forward position, and start the spindle.
- Control the handwheel(12)and lever(14)on apron by hand to correct the distance between tool and workpiece, and choose proper feed depth.
- Turn long./cross lever of tool post(21)to realize automatic feed forward and reverse. Put the lever(21)to the neutral position, the feed will stop.

After tailstock travelling to the workpiece, tight it by quick-lock lever(19). And drilling, reaming, and tapping can be realized through manual feed controlled by handwheel(20).

Notice: If the rapid button is faliure, put the auto. feed lever to the neutral position immediately. And press down the emergency stop button.

5.4.4 Thread cutting

There are two ways for cutting thread

5.4.4.1 Half nut engaged

Engage the half nut by operating lever(13). Spindle forward can cutting the thread, and reverse to retract to the orgin position. After several times, the thread cutting can be finished. This way does not need dial thread indicator.

5.4.4.2 Half nut disengaged

- Engage the half nut by operating lever(13). Spindle forward can cutting the thread, After finishing cutting thread, disengage half nut by lever(13). And return the tool post back to orgin machining position. Reengage the half nut with leadscrew after feeding the tool. The dial thread indicator will be used.
- Turn the lever(3, 4)on headstock, and select proper left/right thread or enlarged pitch, then choose speed by lever(2).
- Select correct metric, imperial, and diametral pitch by operating(5),(6),(7)according to the thread list on gear box.
- Move the tool post to the position of cutting thread by long./cross lever(21), then put the lever(21)to the neutral position.
- Start the main motor by pressing button(16).
- Switch control lever(10)to the forward position, spindle starts.
- Use manual control handwheel(12)and lever(14)to check the distance between tools and workpiece. Move the tool away a certain distance on the longitudinal direction, then choose proper cutting depth.
- Engage half nut lever(13)with the leadscrew, then start cutting the thread.

Notice:

Never turn the lever(10)to reverse directly from forward. Always pause at the brake position for 2 seconds. it will prolong machine working life.

Before cutting the thread, be sure the number of change gear teeth (adopted) is correct or the pitch may be wrong.

5.4.5 Spindle operation while stop

If any parts need changing during operation, the spindle should stop. The steps as follows:

*with mechanical clutch:*put the spindle control lever to the middle position to stop the spindle, or step on the pedal brake to stop the spindle.

*with solenoid clutch:*put the spindle control lever to the middle position to stop the spindle.

For restarting the spindle, the lever should be at the middle position first, then turn the lever to forward or reverse, so the spindle will run again.

5.4.6 Operation while machine stop

- Move the tool post to the tail end of the machine, and to the end of near to lever in cross direction by means of levert(12).
- Turn lever(10)back to the stop position.
- Press down ESB to stop the motor.
- If cooling system being used, put the switch of coolant pump to the position of "0".
- The mains switch should be on OFF position.

5.4.7 Emergency stop

Press down ESP button, if machine needs emergency stop(See button 1 in control system diagram).

5.5 Restart after ESP

5.5.1 Restart after power off

If power cut is enexpected during working, cut off the mains, then put lever(11)to the stop position, and after power on, restart it. Put the mains to ON position, then press mains start button(16), and switch lever(10)to the forward position, so the spindle will start.

5.5.2 Restart after ESP

If anything emergency happens, press down ESB. If the machine need restarting, reset the ESB first, and put lever(10)to the stop position, then press button(16)and put lever(10)to the forward position as well, the spindle will run.

5.5.3 ESP

If the operator is entangled by any running parts of the machine, press down the red ESB immediately, and cut off the power. After that, first aid should be taken. E.g. turn the part back by hand to release it.

5.5.4 Chip remove

Chips should be cleaned after each shift. While cleaning, the proper equipment should be used(such as special hook), and do wear the gloves to avoid hurting by iron chips.

5.5.5 Cross slide control

The top slide can be operated by handwheel(14),(17), also by means of cross handwheel (21)sutomatic feed can be realized.

Normally, put the left/right thread lever on headstock to the position of right thread, the direction of cross lever is the direction of tool post feed. If press down the switch at the end of cross lever, the tool post will travel rapidly.

The above procedure should be carried out under the circumstance of half nut is open. The half nut and feed cutting are interlocked.

5.5.6 Feed box

There are three sets of levers(5),(6)and(7)on feed box.

Lever(5)is used to choose types of thread, such as metric pitch, imperial pitch, module pitch and diametral pitch.

Lever(6)is for basic lever of A and B;

Lever(7)is of multiply lever. When the lever is in the positions of I,II,III and IV, feed shaft is rotating; and in the positions of V, VI, VII and IIIV, leadscrew is rotating. No matter metric pitch, imperial pitch, module pitch or diametral pitch, the change gear does not need be change to realize selecting thread.

5.5.7 Apron

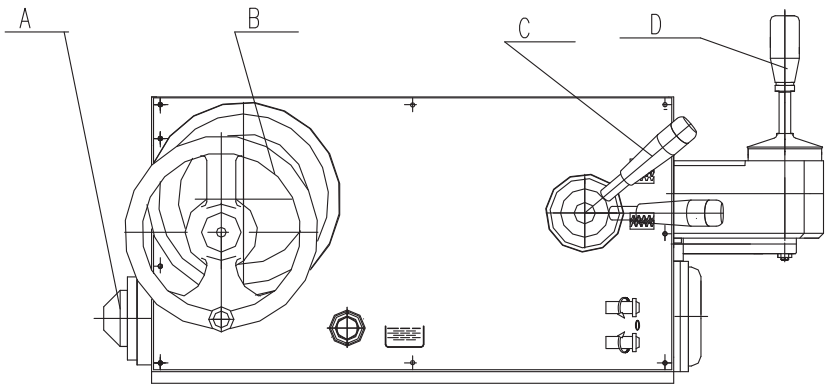

A:overload protection clutch B:apron handwheel C:half nut lever D:cross lever

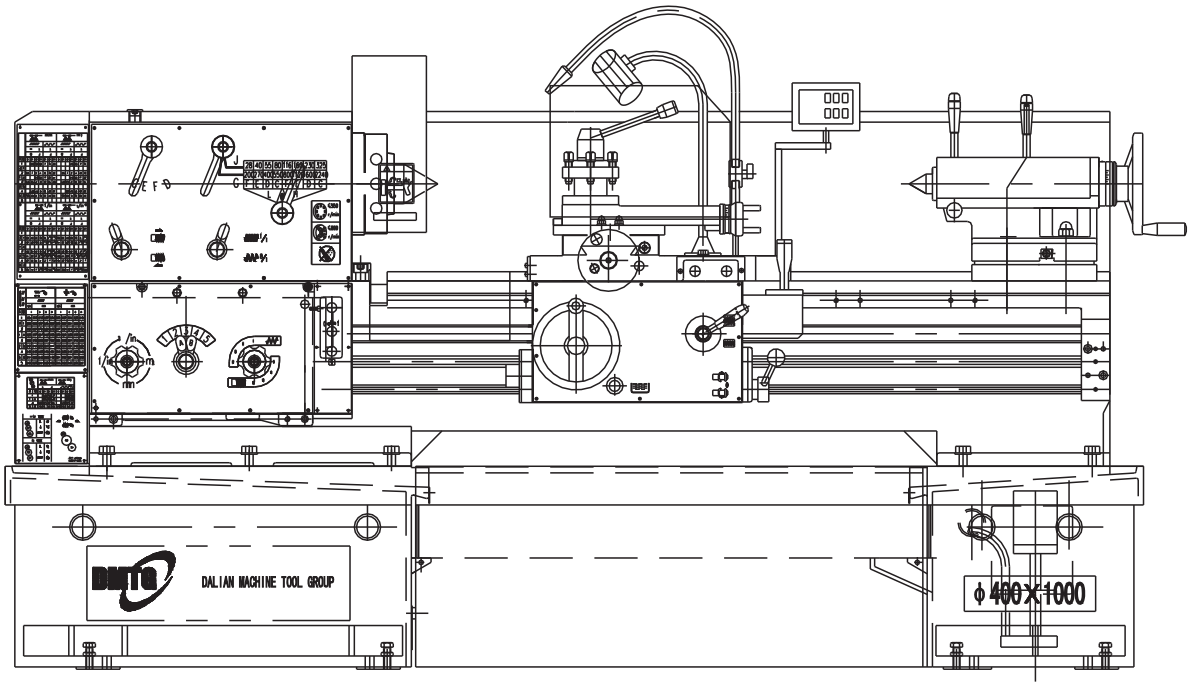

Add:38 Anshan Road, Dalian P.C. 116022
Contract management department(Tel):0086-411-83632832 83642759 83639157
(Fax) 0086-411-83635286 83644012
Before-sales service department(Tel) 0086-411-83632803
(Fax) 0086-411-83644059

After-sales service department(Tel) 0086-411-83642729
(Fax) 0086-411-87407271

Dalian Machine Tool Ex. & Im Department TEL:83630767 83637554 83637761
Fax:0086-411-83646795 83631305
E-mail:sales@dmtg.com.cn

Note: This manual is used for the following horizontal lathes manufactured by DMTG:
CDS6240A, CDS6240B, CDS6240C, CDS6250B,CDS6250C,CDS6256B,CDS6256C, CDS6266B, CDS6266C,CDS6276B,CDS6276C

Illustrations and specifications are not binding in details. The designs are subject to modification without notice.

Operating Notice

This lathe is a kind of high-speed, power machine. If the surroundings is unsuitable, danger will occur.

Before operating this machine, please read the following Safety Guide carefully;To avoid causing danger, pay attention to the surroundings of the machine to keep it in normal state.

This machine is comply with the standard of of EN 60204-1:1997 《Safety machinery-Electrical equipment of machines-Part 1:General requirements》 and EN12840:2001《Safety of machine-tool-Manually controlled turnning machines with or without autmatic control》(the follows call it"CE standard").

Before operating this lathe, please read the Operating Manual carefully, and entirely understand the contents and all safety labels. After that the people can operate the machine, otherwise casualty and damage may occur.

The operator, who should be trained properly, and has operation certificate, can operate the machine. Or the operator should be supervised by a qualified person.

Surroundings

Ambient temperture:+5 ℃~+40 ℃, average temperture of 24 hours is not more than +35 ℃;

Altitude:not more than 1000m;

Relative humidity:not more than 50% when being in +40℃;In lower temperture, the relative humidity may higher, but condensation is not permitted.

Atmosphere:without extra dust, acid gas, corrosive gas or salt.

The lathe can not be exposed to the sun directly. And avoid heat radiation to change the ambient temperture.

The location should be far from vibration sources.

The location should be away from combustible and explosive goods.

Adequate information is also provided to enable the machine to be properly serviced and maintained by persons with the necessary skills and authority.

The Operating Manual and the document supplied with the machine should be kept well.

Environmental protection notice

The following stipulation must be observed when the machine finally scraps:

1）For the scrap battery couldn't be recycled, electric element, rubber and some poisonous, harmful or the waste matter that can't degraded, should send to the indicated local recovery department or emission place.

2）For the lubricant, coolant that couldn't recovery or recycle, which is the waste liquid that is, polluted the environment. Must send to the indicated local drain place to drain.

1. Safety caution

Some safety devices have been mounted for the machine to avoid the operator injured and the equipments shattered. The operator must understand the content of all kinds of safety labels and the following stipulation, and then can operate the machine.

1.1 Requirements to the operator and maintenance person

- The operator should through the training and has the qualification of operating this machine. Before operating, the operator should read the Operating Manual carefully and fully understand the contents, the operator can operate till they have the ability of operating the machine.
- Before operating, should accord to the request of Operating Caution. Wear safety clothing, safety shoes, put the long hair into the hat. When machining the casting materials should wear dust respirator.
- The maintenance should be performed by the professional persons or have the qualification to avoid the accident happens.

1.2 Basic operation

Danger:

- Never touch the transformer*motors and the terminals with high voltage to avoid the danger of electric shock.
- Nobody is permitted to touch the switch with wet hands, otherwise it will cause electric shock.

Notice:

- Provide sufficient working area for safety.
- Adopt single earth line, the length should short.
- The operator should be familiar with the position of emergency stop switch.
- You can press it when you use it.
- If obstacles occur or dangers appear, press down the button firstly, and then power off the main power switch, do not energizing before remove the obstacles.
- Power off the main power switch when powers down.
- Keep the floor clean and dry, and it should be free from oil or water.
- Never blur, scuffing or pick off the caution label, if the writings are slurred or omitted, should order the new from management. Mark the contents while ordering.
- Never touch switch randomly.
- Use the commended lube and grease.

1.3 Requirements before energizing

Danger:

- Check the cable, wire and conductor before powering on because electric shock and

current leak will occur while the insulation layer is damaged.

Notice:

- The cable of energizing switch and masterstroke switch should accord to the cross section of stipulation in circuit diagram which can meet the request.
- Ensure the protective connecting wire, which cross section isn't less than phase conductor section, is connected to PE terminal tightly.
- Check the electric system carefully before powering, notice the motor to see if it is damp.
- Put the oil to the level in oil box, check it and lubricating again when necessary.
- For the lubricating point, oil kinds and the relevant level, please refer to the lubricating label.
- Each switch and operating handle should flexible and good use. Check the actions before working.
- Wear the oil resistant uniform and shoes and wear other safety guard things.

1.4 Requirements after energizing

Notice:

- For the first start of the machine or start after long time non-working, Make the machine free running for several hours, all the lubrication points should be lubricated.
- Notice the rotation of motor to see if it is accord to the stipulation.
- Check the liquid measure of coolant, append the coolant when necessary.

1.5 Regular check

Danger:

- Never put your hands between belt and pulley when checking the tension of the belt.

Notice:

- Check the motor、gearbox and other parts to see if they make the noise.
- Check the lubrication condition of every lubrication point.
- Check the safety guard device to see if it is in the good condition.
- Check the tension of the belt, if the belt is loose, adjust it to suitable condition, if the belt frays severity, change the new belt.

1.6 Preparation before starting the machine

Warning:

- Tool and tool post chucking should be adapted.
- The tools for worn condition will cause damage, so replace the worn tool in time.Provide sufficient lightness for safety check.
- The machine or the tool of environmental equipment and other things should place with

order, and maintain the good relationship and the way expedite.

- Never put tools or other items on headstock、tool post、guarding and other similar positions.
- If the center hole of heavy cylindrical parts is too small, while loading, the workpiece may come out of the center. So the specification and angle of the center hole must be checked carefully.
- The length of workpiece should confine in the stipulations.
- Before starting the machine, anti-rust dope needs to be washed by kerosene. Heated kerosene is used to wash inside of the headstock. Then clean everywhere by wool, and after removing the oil and grease on guideway, paint new guideway lubricant on it. Never use sand paper or other hard substance to wipe the lathe. And make sure to fill the lubricant and coolant into the oil tank and coolant tank respectively as required.

Notice:

- Before operating the machine, check the electric system carefully to see the connection and pin are right, and if the wire loose through transport. After connection, check the rotation to see if it is accord the stipulation.
- Check the safety data list of cutting fluid and lubricant (MSDS) to see if they are harmful to human.Add protection devices if necessary.
- Check the workpiece being machined, if powder or poisonous gas may be produced during machining; add a dust-removing device with outside wind machine. Never machine flammable materiel, such as magnesium, etc.
- Combustible and explosive material or the ma terial can produce toxic pollution cannot be machined,such as, magnesium,lithium,uranium,etc.and the alloy.
- Check each operating handle for its flexibility and put it into middle neutral position.
- Check all the functions of safety guard. For example, power off and interlock,E-stop and interlock chuck guard.Only safety devices in their working position and the functions are normal,could start the machine.
- Before starting close the belt mask,Otherwise,the machine cann't run.
- Leave the people without the working outside the working area.

1.7 Operation

Danger:

- When the spindle running, under any circumstances, never pull the shift handle in front of the headstock.
- Don't operate the machine with long hair; you must wear the helmet before work.
- Never operate with gloves, otherwise it may result in malfunction or cause the danger.
- Workpiece and turning tool must clamp, otherwise it may injure the people.
- When the chuck running with high speed, it must clamp the workpiece tightly to avoid it throw out.

- When the chuck clamps the workpiece, the range of jaw should not exceed the stipulation.
- When unpacking the workpiece, should make the tool and spindle stops. Never touch the workpiece in machining or the spindle in running.
- Don't operate the machine until close the safety guard device.
- Don't use any manual tools, such as emery cloth, file,etc.

Warning:

- Adjust the muzzle of coolant under the condition of turn off.
- Never clean the chip during the cutting.
- Should use special hook to clean the chip. Use the brush to clean the bite and never use the nude hand to clean.
- When machines running, never allow the person in working area.

Notice:

Power off the main switch and press down the main motor stop button when the operator leaves the machine after finishing a task.

1.8 After machining

Notice:

- After turning off the machine, should clean the machine and chip. Clean the chip should use the special hook or other tools, never use nude hand to clean.
- Before turning off, never clean the machine.
- Put the parts to return.
- Check the wiper to see if it shattered and change the new.
- Check the pollution situation of coolant and lube, if mixture severity, please change.
- Check the liquid measure of coolant and lube, append the coolant when necessary.
- Clean the oil disk filter.
- Before leave the machine, should power off the main power.

1.9 Safety equipment

- Belt cover and interlock enddoor switch.
- Emergency stop button.
- Rear guard, chuck guard, chip guard leadscrew cover.

1.10 Maintenance

Before maintenance,you must cut the main switch off and lock it.

Danger:

- Do not allow the person, who does not work with maintenance, to operate the mains and control power of ON switch on belt cover. So, the label of Never operate the switch while the lathe is being service is hung on the switch or other relevant place. And this kind of label should be seen obviously, also easy to pick off, but hard to fall off.
- Carry out the maintenance with electric is dangerous, in principle, during the maintenance the main circuit switch should be cut off and lock it.

Warning:

The electric maintenance should be performed by the professional persons and keep the contact with the principal, never decide by oneself.

Notice:

- Travel limit device should not unpack or modification.
- Should use the qualification factory's cable and electric element.
- After the maintenance, should clean the machine and the environment, erase the water and oil, provide a good machining environment.
- The parts and the waste oil should keep away with the machine in order to keep safety.

1.11 Prohibition

- Prohibit pull the speed change lever when the spindle running.
- Prohibit pull the feed box lever when high and middle speed.
- Prohibit load and unload the parts, check the parts, remove the obstacle and clean the chips during the machine running.
- Prohibit wear the loose clothes, the decoration, gloves to operate and operate the machine with long hair.
- Prohibit any person without commission to start, operate, maintenance, open the electric cabinet door and touch the electric element.

1.12 Caution label

1.12.1 Chuck label

The following label is stick to chuck guard: It means that do not allaw to touch when spindle is running.

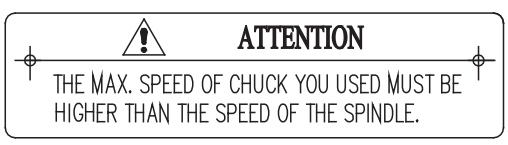

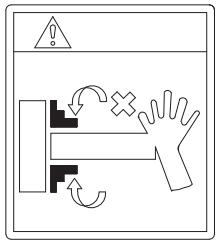

1.12.2 Belt

There is a label on end guard of the headstock: It means that do not touch the running belt and pulley by hand.

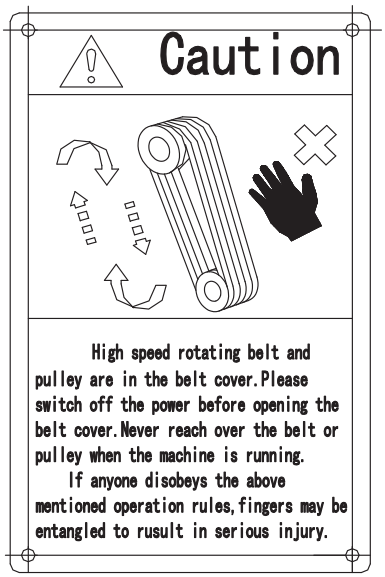

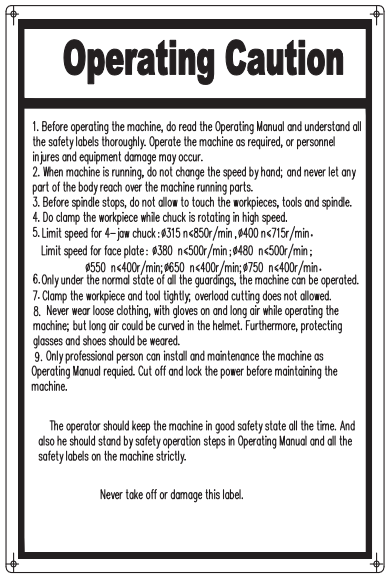

1.12.3 Operation

There is the following label on end guard of the headstock, which shows some alarm on operation.

1.12.4 On the right side of headstock.

Safety caution label

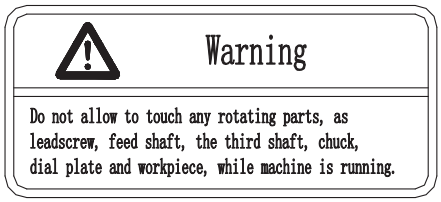

1.12.5 Be care of electric shock

The label is on wiring box back of saddle, the place of power leadin and electric cabinet door.



1.12.6 On the left of leadscrew cover

Safety caution label

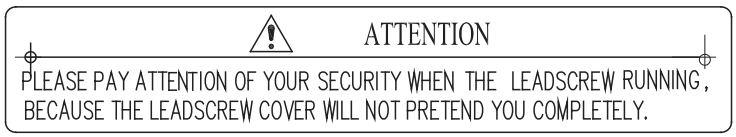

1.12.7 Other alarm labels and nameplates refer to Appendix of this Operating Manual

2. Brief introduction

2.1 Application

This Operating Manual is used for the following lathe with gap piece or without gap piece:

CDS6240A、CDS6240B、CDS6250B、CDS6256B、CDS6266B、CDS6276B、CDS6240C、CDS6250C、CDS6256C、CDS6266C、CDS6276C

2.2 Meaning of model

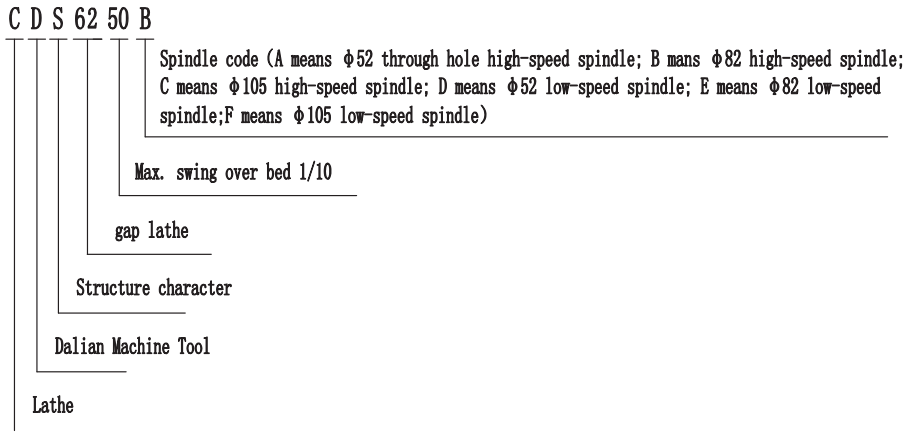

For A, B and C code of spindle, the headstock can be mechanism clutch type or solenoid clutch type. While for D, E and F low-speed lathe, only mechnism clutch is adopted.

2.3 Usage and machining range

2.3.1 Machine usage

This machine can finish turning of internal/external cylinder, taper, end face, all kinds of metric thread, imperial thread, module and pitch thread, and drilling, reaming and grooving could also could be done.

The material as steel, iron, cast iron and non-ferrous metal can be machined by this lathe. The precision of the workpiece machined by this lathe could be level IT7, and the roughness is of Ra3.2. For the gap piece lathe, it can also machine falt disc and odd parts besides the above parts.

The max. machining weight, which is the max. workpiece weight between two fixed center, should be less than 300 kg. And the spindle speed is less than 60 rpm.

While for solenoid clutch machine, only manual brake is adopted, but pedle brake function can be added to it.

2.3.2 Machining range

The machining range is according to machine specification and technical parameters. Over range machining is forbidden in case of damaging the machine, or lead to casualty.

2.3.3 Machining inapplicability

Combustible and explosive material or the material can produce toxic pollution cannot be machined,such as,magnesium,lithium,uranium,erc.and the alloy.And non gyro rotor workpiece cannot be machined by this machine.

Notice:

When remove the gap piece for machining the flat disc parts larger than the max. swing over bed, if left side of saddle is beyond the end of guideway, adjust the tool carriage or lengthen tool shank to meet the requirement.

2.4 Machine accuracy

The accuracy is comply with the standard of ISO 1708:1989《Acceptance conditions for greneral purpose parallel lathe-Testing of the accuracy》.

2.5 Noise level

According to EN12840:2001《Safety of machine-tool-Manually controlled turning machines with or without autmatic control》-Annex A (normortive) Noise emmission measurement.

The machine is in its working position, which measured equivalent and continual A weighting noise level $\leqslant$ 83dB (A).

2.6 Influence to the surroundings

No evil influence and poisonous air is brought.

3 Technical parameter

3.1 Main specification

Item \ Model	CDS6240A CDS6240B CDS6240C	CDS6250B CDS6250C	CDS6256B CDS6256C	CDS6266B CDS6266C	CDS6276B CDS6276C
Max. swing over bed	400 mm (16")	500 mm (20")	560 mm (22")	660 mm (26")	760 mm (30")
Max. swing of workpiece over carriage	230 mm (9")	290 mm (11 3/8")	350 mm (13 3/4")	440 mm (17 3/8")	540 mm (21 1/4")
Max. swing in gap piece	700 mm (27 1/2")	760 mm (30")	790 mm (31")	870 mm (34")	965 mm (38")
Distance from spindle center to bed way	220 mm (8 5/8")	250 mm (9 3/4")	280 mm (11")	325 mm (12 3/4")	375 mm (14 3/4")
Gap piece length	250 mm (10")				
Max. workpiece length	750 mm(30"),	1000 mm(40"),	1500 mm(60"),	2000 mm(80"),	2200 mm(88"), 3000 mm(120")
Tip of apron	630 mm ,	880 mm ,	1380 mm	1880 mm ,	2080 mm , 2880 mm ,
Bed width	394 mm (15 1/2")				
Gideway type	V				

Headstock

Item \ Model	CDS6240A	CDS6240B CDS6250B CDS6256B CDS6266B CDS6276B	CDS6240C CDS6250C CDS6256C CDS6266C CDS6276C
Spindle bore	ø52 mm (2 1/16 ")	ø82 mm (2 1/8 ")	ø105 mm (4 1/8 ")
Type of spindle nose	C6(D6/A2-6)	D8(C8/A2-8)	D8(A2-8)
Front spindle taper	Morse 6	Ø90/1:20	Ø110/1:20
Spindle speed ranges	16	16	16
Spindle speed:	28-2240 r/min	26-2000 r/min	26-1700 r/min

Feedrate	Longitudinal		0.044~1.48 mm/r
	Cross		0.022~0.74 mm/r
Threads	Metric pitches		0.35~80 mm (53/73)
	Imperial T.P.I		7/16~80T.P.I. (47)
	Module pitches		0.20~40 mm (45/66)
	Diametral pitches		7/8~160D.P. (42)
Top slide and cross slide	Tool shank section		25X25mm (1"x1")
	Dis. btw spindle center and tool mounting surface		27mm (1 1/16")
	Max. travel of top slide		150 mm (6")
	Top slide swivel		± 45°
	Max. travel of cross slide	CDS6240, CDS6250,CDS6256	348 mm (13 3/4")
		CDS6266, CDS6276	355 mm (14 ")
	Pitch of cross slide leadscrew		5 mm (1/5")
	Longitudinal rapid speed	50Hz	4.2 m/min
		60Hz	5.0 m/min
	Cross rapid speed	50Hz	2.1 m/min
		60Hz	2.5 m/min
Tailstock	Quill diameter		75mm (2 15/16")
	Quill travel		150 mm (6")
	Quill Morse taper		Morse 5
	Set over		± 15mm (± 3/5")
Motor	Type of main motor		YA132M-4B3
	Power of main motor		7.5kW 10HP (special 11kW 15HP)
	Power of motor for carriage rapid travel		250W 1/3HP
	Power of coolant pump motor		150W 1/5HP
	Flow of coolant pump		25L/min
Leadscrew	Diamter		40mm (1 9/16")
	Pitch		12mm (1/2")
Height from spindle center to floor			CDS6240: 1100 mm CDS6250: 1130 mm CDS6256: 1160 mm CDS6266: 1205 mm CDS6276: 1265 mm

3.2 Accessary specification

Steady rest CDS6240: φ30～ φ160 mm

CDS6250/CDS6256/CDS6266/CDS6276: φ30～φ200 mm

Big hole steady rest

CDS6240/ CDS6250/CDS6256/ CDS6266/CDS6276: φ152～φ305 mm

Follower rest CDS6240: φ20～φ80 mm

CDS6250/CDS6266: φ20～φ100 mm

Big hole follower rest

CDS6240/ CDS6250/CDS6256/ CDS6266/CDS6276: φ76～φ216 mm

The illumination of working lamp is ＞500 lux

3.3 Overall dimension and net weight of machine (excluding machine acessories)

Max. length of workpiece (mm)			750	1000	1500	2000	3000
Overall dimension (mm)		Length	2350	2600	3100	3600	4600
		Width	1186				
		Height	CDS6240:1360 / CDS6250:1420 / CDS6266:1550				
Weight (approx) (kg)	Net	CDS6240	2050	2100	2150	2260	3030
		CDS6250	2100	2150	2200	2310	3080
		CDS6256	2130	2180	2230	2340	3120
		CDS6266	2150	2200	2250	2360	3150
		CDS6276	2200	2250	2300	2410	3200
	Gross	CDS6240	2620	2760	2950	3170	4010
		CDS6250	2670	2810	3000	3220	4060
		CDS6256	2700	2840	3030	3250	4090
		CDS6266	2720	2860	3050	3270	4110
		CDS6276	2770	2910	3100	3320	4160

3.4 Machine load

3.4.1 Machine power

$$T = 9550 \frac{P\ (kW)}{nj\ (r/min)} \times \mu \qquad (Nm)$$

T --- Theoretical torque Mm

P --- Main motor power kW

nj --- Theoretical speed r/min

μ --- Mechanical efficiency of main transmission system ~0.86

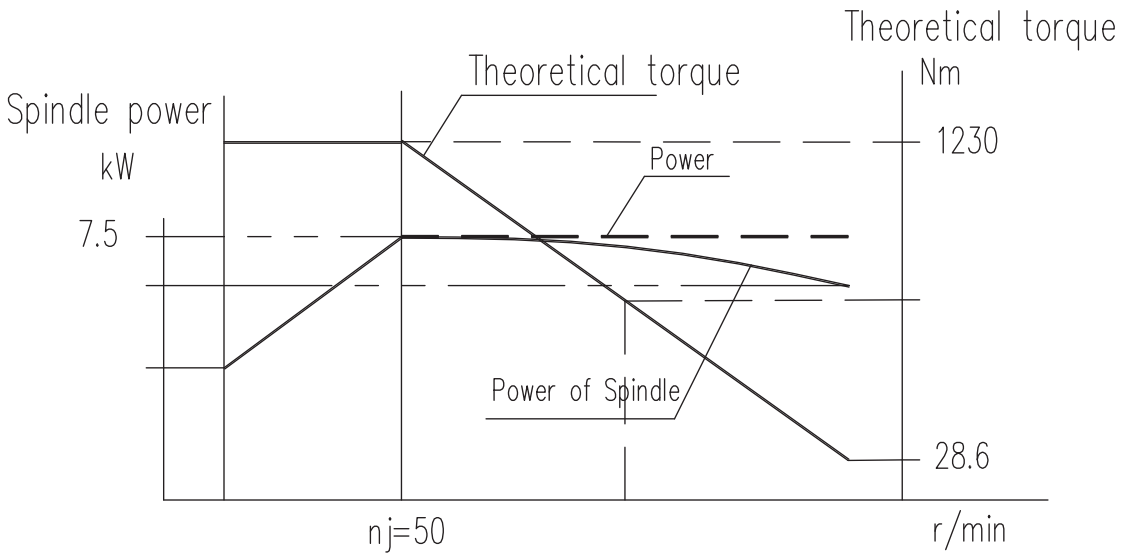

3.4.2 Max.workpiece weight and spindle speed

Spindle speed r/min	Max. workpiece weight
26 36 50	300 kg
72 100 125	280 kg
150 180 210	260 kg
250 300 360	250 kg
1000 1220 1440	200 kg
1700 2000 2240	160 kg

Material coefficient K

Medium carbon steel	Low carbon steel	Tool steel	Cast iron	Cu/cast copper	Al./cast aluminium
1.0	1.1	0.75	1.4~2.1	~10	~10

Contents

Operating notice 02
Environmental protection notice 03
1. Safety caution 1
1.1 Requirements to the operator and maintenance person 1
1.2 Basic operation 1
1.3 Requirements before energizing 1
1.4 Requirements after energizing 2
1.5 Regular check 2
1.6 Preparation before starting the machine 2
1.7 Operation 3
1.8 After machining 4
1.9 Safety equipment 4
1.10 Maintenance 4
1.11 Prohibition 5
1.12 Caution label 5
1.12.1 Chuck 5
1.12.2 Belt 6
1.12.3 Operation 6
1.12.4 Safety alarm 6
1.12.5 Be care of electric shock 6
1.12.6 On the left of leadscrew cover 6
1.12.7 Other alarm label 6
2 Brief introduction 7
2.1 Application 7
2.2 Meaning of model 7
2.3 Usage and machining range 8
2.3.1 Machine usage 8
2.3.2 Machining range 8
2.3.3 Machine inapplicability 8
2.4 Machine accuracy 8
2.5 Noise level 8
2.6 Influence to the surroundings 8

3 Technical parameter 9
3.1 Main parameter 9
3.2 Accessory specification 12
3.3 Overall dimension and net weight 12
3.4 Load 13
3.4.1 Power 13
3.4.2 Max. weight of workpiece & spindle speed 14
3.4.3 Permitting cutting parameter 15
4 Handling and installation 16
4.1 Handling and store 16
4.2 Machine lift 16
4.3 Installation 18
4.3.1 Preparation 18
4.3.2 Power connector 18
4.3.3 Main power 18
4.3.4 Installation 18
4.3.4.1 Foundation drawing 19
4.3.4.2 Procedure 20
4.3.4.3 Inside equipment connecting 20
4.3.4.4 Cleaning 21
4.3.4.5 Lubrication check 21
4.3.4.6 The first use of the machine 21
4.3.4.7 Mount of chuck, faceplate and driver plate 22
4.4 When machine the imbalance workpiece a balane block should be added to the fixture 23
4.5 Besides the manufacture factors,machine noise is related to the operating method. 23
5 Control system 24
5.1 Control lever list 25
5.2 Meaning of control symbol 26
5.3 Meaning of handwheel and handle direction 27
5.4 Steps 27
5.4.1 Preparation 27

5.4.1.1 Possible working location of operator 28
5.4.1.2 Requirements to workpiece clamp 28
5.4.1.3 Requirements to tools 29
5.4.2 Machine normal start 29
5.4.3 Power feed 29
5.4.4 Thread cutting 30
5.4.4.1 Half nut engaged 30
5.4.4.2 Half nut disengaged 30
5.4.5 Spindle operation while stop 31
5.4.6 Operation while machine stop 31
5.4.7 Emergency stop 31
5.5 Restart after ESP 31
5.5.1 Restart after power off 31
5.5.2 Restart after ESP 31
5.5.3 ESP 31
5.5.4 Chip remove 32
5.5.5 Cross slide control 32
5.5.6 Feed box 32
5.5.7 Apron 32
5.5.8 Saddle lock 33
5.5.9 Apron adjusting 33
5.5.10 Tailstock 34
5.5.11 Dismount/remount gap piece 34
6 Change wheel 35
6.1 Change wheel 35
6.1.1 Metric 35
6.1.2 Imperial 35
6.1.3 Metric change wheel list 36
6.1.4 Imperial change wheel list 37
6.1.5 Metric change wheel for special thread 38
6.1.6 Imperial change wheel for special thread 39
6.2 Thread list 40
6.2.1 Thread list for metric lathe 40

6.2.2 Thread list for imperial lathe 41
6.2.3 Special thread list for metric lathe 42
6.2.4 Fine thread for metric lathe 42
6.3 Dial thread indicator 43
6.3.1 Mounting 43
6.3.2 Purpose 43
6.3.3 Usage 43
7 Maintenance and service 45
7.1 Accuracy check 45
7.1.1 Machine accuracy 45
7.1.2 Headstock check 45
7.1.3 Tailstock check 45
7.2 Driving belt adjusting 45
7.3 Clutch adjusting (for mechanical clutch lathe) 46
7.4 Headstock brake adjusting (ditto) 47
7.5 Spindle bearing adjusting 47
7.5.1 Bore of 52mm and 82mm spindle 47
7.5.2 105mm dia.spindle 48
7.6 Tool mount and adjustment 49
7.7 Adjustment of cross ball nut 50
7.8 Gib of guideway 50
7.9 Supplement to chuck, fixture and spindle 51
8 Machine protective measures 53
8.1 Emergency-stop button 53
8.2 Necessary safety caution label 53
8.3 Apron overload safety clutch 53
8.4 Overtravel clutch 53
8.5 Disengaged device for apron handwheel 54
8.6 Interlock of leadscrew and feed shaft 55
8.7 Handle protection for rapid moving 56
8.8 Pedal brake 56
8.9 Other safety guards 57
8.9.1 Chip guard 57

8.9.2 Chuck guard 57
8.9.3 Leadscrew cover 58
8.9.4 Safety door switch 58
8.10 Hazard alarm 58
8.10.1 Danger from machining material 58
8.10.2 Objects fly off 59
8.10.3 Danger from parts replacement 59
9 Machine service and lubrication 59
9.1 Service 59
9.2 Lubrication 60
9.2.1 Headstock 60
9.2.2 Gearbox 60
9.2.3 Oil tank in the left plinth 61
9.2.4 Apron 61
9.2.5 End gear wheel 61
9.2.6 Saddle, cross slide and top slide 61
9.2.7 Tailstock 61
10 Cutting fluid usage and cleaness 62
10.1 Preparation before fill in 62
10.2 Fill the cutting fluid 62
10.3 Usage 62
10.4 Replacing period 63
10.4.1 Cutting fluid replacement 63
10.4.2 Period for replacement 63
11 Check and maintenance 64
11.1 Check and maintenance 64
11.1.1 Regular check 64
11.1.2 Common fault and removal 65
11.1.3 Permissible wear of transmission part and replacement 66
11.2 Machine overhaul 66
12 Machine accessories 67
12.1 Accessory with the machine 67
12.2 Special accessory 67

12.3 Taper profile device mount and usage 68
12.3.1 Mount 68
12.3.2 Usage 69
12.4 Steady rest and follower rest 69
12.4.1 Steady rest 69
12.4.2 Follower rest 70
12.5 DRO 70
13 Electric system 71
13.1 Control system 71
13.2 Brief introduction 73
13.3 Electric system mount 74
13.3.1 Power leadin 74
13.3.2 Power phase check 74
13.3.3 Space for maintenance 74
13.4 Machine electric and operation 74
13.4.1 Preparation before machine start 74
13.4.2 Start the lathe 75
13.4.3 Main motor start and stop electromagnetic clutch 75
13.4.4 Coolant pump start and stop 75
13.4.5 Rapid motor start and stop 76
13.4.6 Emergency stop and release 76
13.4.7 Illumination 76
13.4.8 Machine stop 76
13.5 Electric equipments service 76
13.5.1 Preventive check 76
13.5.2 Insulating resistance measuring 77
13.5.3 Earthing protection check 77
13.5.4 Service for common fault 77
13.5.5 Electric maintenance 78
13.6 Electric drawing 78
13.7 Supplement for dual-voltage machine 79
Appendix-Other alarm labels and nameplates 87